TWAUDIO®

ELLA6-system | Rigging manual

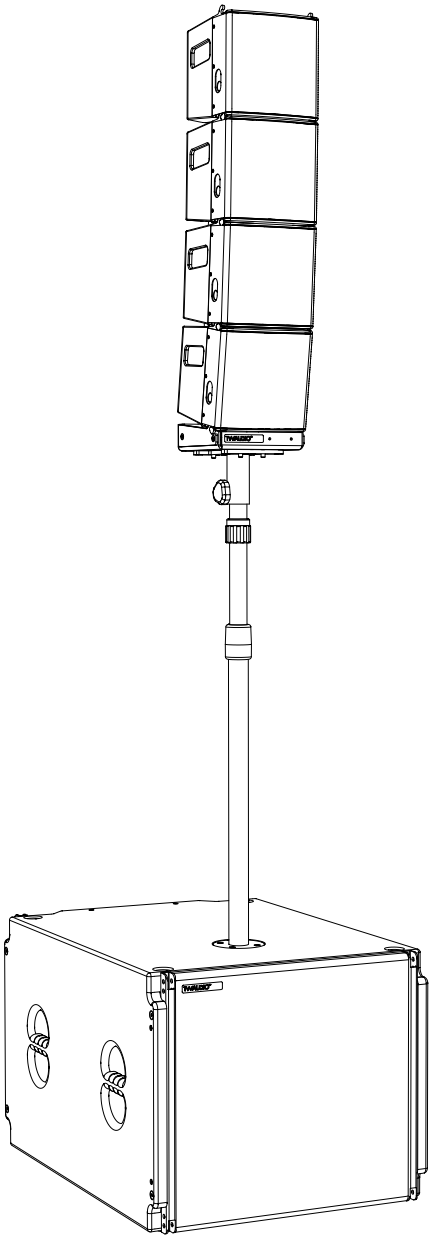

Introduction

Thank you for choosing a high-quality product “MADE IN GERMANY” from the brand TWAUDiO.

ELLA is a ground-breaking, world first achievement for this size of enclosure. Combining the slim form factor of a column with the flexibility of a line array, ELLA incorporates TWAUDiO’s passive cardioid technology.

Behind the elegant design front panel, ELLA offers a highly engineered and specialised waveguide.

The HF unit reproduces silky smooth and precise high frequencies up to 20 kHz with minimum distortion, even at very high sound pressure levels.

If you lend your product to another party, inform that party of the safety-related operating procedures and hand over this assembly guide. If you require additional copies of this manual, you can obtain them free of charge from TWAUDiO or download them from www.twaudio.de

Instructions in this user manual

Strictly adhere to the instructions contained in this operating manual that are marked as follows:

This symbol in combination with the signal word “Warning” identifies a potentially hazardous situation. Failure to comply with this safety instruction can lead to serious injury or even death.

This symbol in combination with the signal word “Warning” identifies a potentially hazardous situation. Failure to comply with this safety instruction can lead to serious injury or even death.

This symbol in combination with the signal word “Warning” identifies a potentially hazardous situation. Failure to comply with this safety instruction can lead to serious injury or even death.

This symbol in combination with the signal word “Warning” identifies a potentially hazardous situation for persons with a pacemaker. Failure to comply with this safety instruction can lead to serious injury or even death.

CAUTION

This symbol in combination with the signal word “Caution” identifies a potentially hazardous situation. Failure to comply with this safety instruction can lead to light or moderate injury.

NOTE

This symbol in combination with the signal word “Note” identifies a potentially hazardous situation. Failure to comply with this safety instruction can lead to product damage.

TIP

This symbol in combination with the signal word “Tip” identifies additional information or notes that will simplify working with TW AUDiO products on the basis of practical experience.

Notes on the products

Read manual before use!

Before using all the rigging components, carefully read the rigging book and keep it with the components.

General information

Rigging manual: Rm-ELLA6-system
Version 2.0 en, 09/2024
© by TW AUDiO 2024; all rights reserved.

All information contained in this operating manual was correct to the best of our knowledge at the time of printing.

Quality warranties or assurance of suitability for a certain type of use based on the technical specifications, dimensions and weights are not granted by TW AUDiO.

TW AUDiO also shall not assume liability for any secondary damage (property damage and/or personal injury) nor for the failure to comply with this operating manual!

TW AUDiO reserves the right to update this document based on recent developments.

TW AUDiO INTERNATIONAL GmbH
Osterholzallee 140-2
71636 Ludwigsburg (Germany)

Phone : + 49 (0) 71 41-48 89 89 0
Fax: + 49 (0) 71 41-48 89 89 99
E-Mail: info@twaudio.de
WWW: www.twaudio.de

Content

1. Safety | Intended use 6
2. System components 10
2.1 Rigging components 10
2.1.1 BPE6 Baseplate E6 10
2.1.2 RPE6 Riggingplate E6 10
2.1.3 BMP150 Bumper 150 11
2.1.4 LA150 Loadadaptor 150 11
2.1.5 SFE6 Smallframe E6 11
2.1.6 SFE6-II Smallframe E6 12
2.1.7 DTE6 Downtiltadaptor E6 12
2.1.8 PME6 Polemount E6 12
2.1.9 DHST Doughty Halfcoupler Slimline 13
2.1.10 HSA Pole mount adaptor 13
2.1.11 CaseE6 Case 13
2.2 Loudspeaker 14
2.2.1 ELLA6 14
2.2.2 ELLA L18 14
2.2.3 VERA S32 15
3. Commissioning 16
3.1 Setup 16
3.2 Wind load 16
3.3 Underground 17
3.4 Pitfalls 17
3.5 Danger of tipping over 17
3.6 Rigging - general function 18
3.6.1 Operating the front locking mechanism 18
3.6.2 Operating the front rigging mechanism for ground stack operation 19
3.6.3 Operating the front rigging mechanism for flying/suspended operation 20
3.6.4 Actuation of the locking bolt in the rear rigging 21
3.7 BPE6 - mounting holes 24
3.8 Down-tilt angles 24
3.9 BPE6 - bayonet mount 25
3.10 Ground stack mode 26

3.10.1 Tripod / distance rod / design stand 26
a) BPE6 + HSA 27
b) BPE6 + PME6 28
c) BPE6 + Design stand 29
3.10.3 Downtilt-adaptor 30
a) Angle settings DTE6 30
b) DTE6 31
3.11 RPE6 - mounting holes 32
3.12 0°- axis ELLA6 32
3.13 RPE6 - bayonet mount 33
3.14 Rigging-mode with DHST and RSM10 35
a) DHST + RPE6 36
b) RSM10 + RPE6 37
3.15 Rigging-mode with SFE6 38
3.16 Rigging-mode with SFE6-II 40
3.17 Use LA150 Loadadaptor 150 in the flown system 42
3.18 Secondary safety component 44
3.19 Rigging-mode with RPE6 and BMP150 and LA150 45
3.20 CaseE6 47
4. Transport and Storage 50
5. CE Conformity Declaration 51
6. Disposal 51

1. Safety | Intended use

Please adhere to the following safety instructions to avoid risks when using accessories.

The rigging components are developed for use in professional sound systems. The rigging components may only be used by trained and qualified personnel.

Note the operating modes described in this assembly instructions. Other uses are not permissible.

Damage caused by improper use is not covered by TW AUDiO.

WARNING

Before every operation, check the integrity of each rigging component(s) and ensure that all parts are in perfect condition.

The scope of delivery includes specified components. Only use the recommended and certified components.

WARNING

This rigging manual describes how to use the rigging components correctly. Any other use shall be deemed improper and may result in damage or even injury.

Modifications or alterations to individual parts of the rigging components are not permitted! Danger to life!

CAUTION

The rigging components are designed both for indoor and outdoor use.

WARNING

The rigging components may only be used by trained and qualified personnel. Personnel must check the component(s) for suitability before each use.

WARNING

When visible damage to any part of the rigging components are detected, they must be decommissioned immediately.

WARNING

Please keep all elements of the rigging components away from children! The small parts can easily be swallowed and lead to suffocation!

WARNING

Every rigging component has a certified payload / Safe Working Load (SWL). Do not exceed this payload.

The respective maximum payload (SWL) can be found in the subchapters in chapter 2.1.

WARNING

Before mounting the rigging components check that walls, ceilings, tripods etc are capable of carrying the payload of the components.

WARNING

Make sure that no water pipes, electrical lines or any other lines are behind the intended place of mounting.

WARNING

Only use wall plugs and screws which are suitable for the intended mounting and structural fabric. All screws must be set and tightened properly. Ensure that the fixing holes have the correct depth and diameter. Always use all fixing holes.

WARNING

When moving (assembling, dismantling, maintaining) the rigging components, ensure sufficient space to prevent collisions with other objects.

CAUTION

Do not squeeze or twist the electrical cables of the loudspeakers during the installation of the rigging components. The respective national electrotechnical rules and regulations are applicable.

WARNING

All screw connections should be checked each time the rigging components are installed. Tighten all loose screws. If this is no longer possible, the screws must be replaced.

WARNING

Every time you assemble and disassemble your system structures, ensure that you never reach between the loudspeakers with your fingers, hands or other parts of the body.
There is a risk of crushing!

Always use the side recesses!

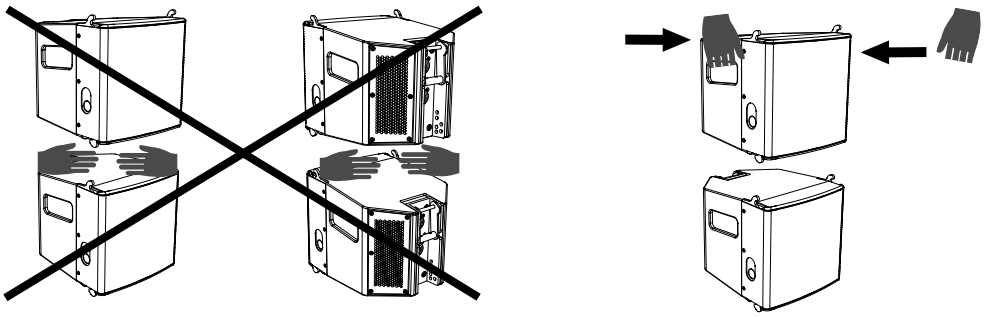

Please adhere to the following safety instructions to avoid risks when operating loudspeakers.

The loudspeakers are developed for use in professional sound systems. The loudspeaker may only be used by trained and qualified personnel.

Note the operating modes described in this operating manual. Other uses are not permissible.

Damage caused by improper use is not covered by TW AUDiO.

WARNING

Loudspeakers generate an electromagnetic field. Persons with pacemakers are not permitted to remain in the immediate vicinity of loudspeakers as the electromagnetic fields can cause pacemakers to malfunction.

WARNING

When working with heavy loads exceeding 20 kg (44 lbs.), use suitable aids (dollies, hoisting slings, etc.). Multiple persons may be required depending on the situation.

Ensure that the units are in a stable position and are firmly attached. A falling loudspeaker can result in serious personal injury and property damage.

When using and assembling TW AUDiO loudspeakers, only use materials specified by TW AUDiO. These tasks must be performed by qualified personnel. Adhere to the applicable safety regulations.

NOTE

When setting up loudspeakers, ensure that they are not exposed to the following ambient conditions:

- Direct sunlight
- Humidity
- Jolting
- Dust

WARNING

Keep away from the immediate vicinity of loudspeakers that are operated at high sound pressure levels. These loudspeaker systems are capable of endangering your health. Sound levels beginning as low as approximately 90 dB SPL can lead to long-term hearing impairment.

NOTE

Avoid:

- Feedback
- Distorted signals (clipping) and
- Peaks resulting from switching on devices, plugging in devices or unplugging devices during operation.

Such signals can lead to loudspeaker overload and ultimately to loudspeaker failure.

WARNING

Ensure that the loudspeaker is not exposed to permanent thermal overloads. Thermal overloads may cause a fire and result in serious personal injury and property damage.

Note that TW AUDiO does not provide a warranty for damage that can be attributed to this type of overload and therefore cannot be held liable for any secondary damage.

NOTE

A permanent magnetic field is present in the immediate vicinity of loudspeakers. Ensure that objects which react sensitively to magnetic fields are not located in the immediate vicinity of the loudspeaker. In particular, this applies to magnetic storage media, magnetic stripe cards such as debit cards and CRT displays. A distance of approximately one meter is sufficient to avoid damage.

NOTE

Check loudspeakers and accessory parts regularly for visible wear. This is essential to ensure continuing fault-free operation. Worn parts should be replaced immediately. Spare parts are available from TW AUDiO.

2. System components

2.1 Rigging components

2.1.1 BPE6 Baseplate E6

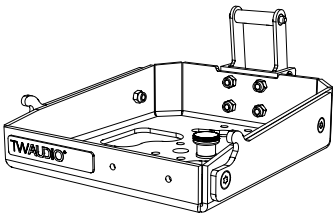

Description	Baseplate for stacking applications; can be combined with PME6 or screwed with M20 pole mount flange (Subwoofer)
maximum payload	50 kg [110.2 lbs] on tripod
Dimensions (h x w x d)	196 x 253 x 72 mm [77.2 x 99.6 x 28.4 in]
Weight	2,5 kg [5.5 lbs]
Surface	powder-coated

2.1.2 RPE6 Riggingplate E6

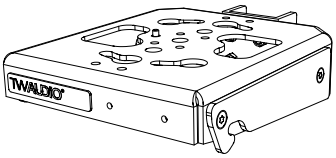

Description	Riggingplate for rigging applications; can be combined with BMP150
maximum payload	150 kg [330.7 lbs] This corresponds e.g. 24x ELLA6 or 8x ELLA L18
Dimensions (h x w x d)	196 x 253 x 55 mm [77.2 x 99.6 x 21.7 in]
Weight	2,4 kg [5.3 in]
Surface	powder-coated

2.1.3 BMP150 Bumper 150

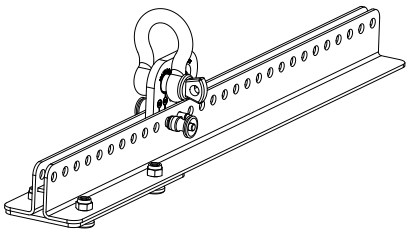

Description	Bumper for rigging applications; included quick change adaptor; included 1x LA150; RPE6 required
maximum payload	150 kg [330.7 lbs] This corresponds e.g. 24x ELLA6 or 8x ELLAL18
Dimensions (h x w x d)	584 x 80 x 48 mm [229.9 x 31.5 x 18.9 in]
Weight	4,2 kg [9.3 lbs]
Surface	powder-coated

2.1.4 LA150 Loadadaptor 150

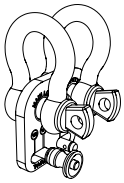

Description	Loadadaptor for BMP150 with shackle and 2x quick-lock pin
Weight	0,4 kg [5.5 lbs]
Surface	powder-coated

2.1.5 SFE6 Smallframe E6

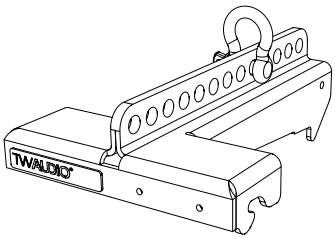

Description	Smallframe for rigging applications; included shackle
maximum payload	70 kg [154.3 lbs] This corresponds e.g. 12x ELLA6 or 4x ELLAL18
Dimensions (h x w x d)	95 x 196 x 280 mm [3.7 x 7.7 x 11 in]
Weight	2,0 kg [4.4 lbs]
Surface	powder-coated

2.1.6 SFE6-II Smallframe E6

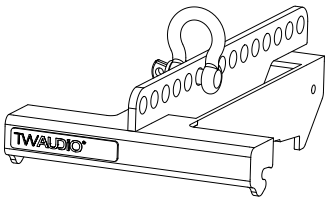

Description	Smallframe for rigging applications; included shackle
maximum payload	70 kg [154.3 lbs] This corresponds e.g. 12x ELLA6 or 4x ELLA L18
Dimensions (h x w x d)	92 x 196 x 312 mm [3.62 x 7.72 x 12.28 in]
Weight	2,0 kg [4.4 lbs]
Surface	powder-coated

2.1.7 DTE6 Downtiltadaptor E6

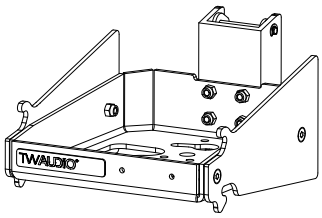

Description	Adaptor for connecting ELLA6 and ELLA L18
maximum payload	35 kg [77.2 lbs] This corresponds e.g. 6x ELLA6
Dimensions (h x w x d)	128 x 196 x 251 mm [5 x 7.7 x 9.88 in]
Weight	3,1 kg [6.83 lbs]
Surface	powder-coated

2.1.8 PME6 Polemount E6

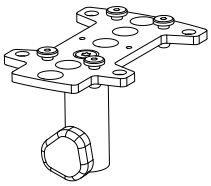

Description	tripod adaptor with quick change adaptor; BPE6 required
maximum payload	50 kg [110.2 in]
Dimensions (h x w x d)	116 x 130 x 196 mm [4.6 x 5.1 x 7.7 in]
Weight	1,6 kg [3.53 in]
Surface	powder-coated

2.1.9 DHST Doughty Halfcoupler Slimline

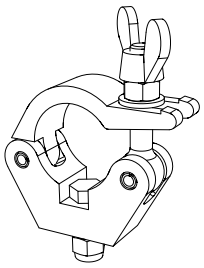

Description	Element for truss assembly; RPE6 required
maximum payload	750 kg [1653.5 lbs]
Tube ø	48-51 mm [1.9-2.0 in]
Dimensions (B)	30 mm [51.2 in]
Attachment	M12
Weight	0,5 kg [1.1 lbs]

2.1.10 HSA Pole mount adaptor

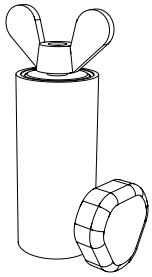

Description	Adaptor for mounting on tripot
maximum payload	50 kg [110.2 lbs]
Dimensions (H x ø)	100 x 36 mm [3.9 x 1.4 in]
Thread	M12x15
Weight	0,4 kg [0.9 lbs]

2.1.11 CaseE6 Case

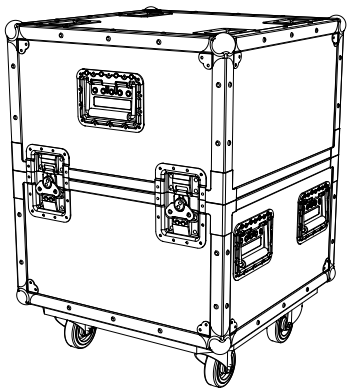

Description	Case for 4x 3 ELLA6 or 4x ELLA L18, 2x BMP150, 2x BPE6, 2x RPE6, Patch cable, LA150; tools, Small material
Dimensions (h x w x d)	800 x 600 x 600 mm [31.5 x 23.6 x 23.6 in]
Weight	39 kg [85,98 lbs]

2.2 Loudspeaker

2.2.1 ELLA6

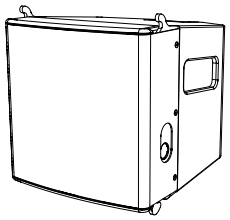

Drivers	1x 6,5“ LF / 5x 1“ HF
Frequency response	90 - 20000 Hz
Power handling (program/Peak)	400 / 800 W
Impedance	24 Ω
Coverage (h x v)	120° x 10°
Max. SPL / 1m	129 dB
Dimensions (h x w x d)	200 x 200 x 260 mm [7.9 x 7.9 x 10.2 in]
Weight	5,5 kg [12 lbs]
Surface	Warnex textured paint

2.2.2 ELLA L18

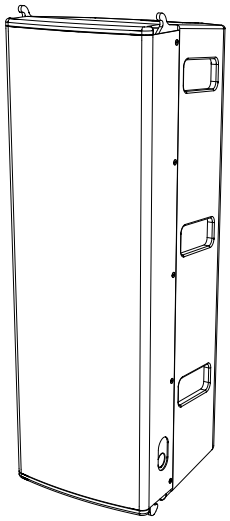

Drivers	3x 6,5“ LF
Frequency response	90 - 1000 Hz
Power handling (program/Peak)	1200 / 2400 W
Impedance	8 Ω
Max. SPL / 1m	128 dB
Dimensions (h x w x d)	604 x 200 x 260 mm [23.8 x 7.9 x 10.2 in]
Weight	14,2 kg [31.3 lbs]
Surface	Warnex textured paint

NOTE

Please note that the ELLA L18 has the same height as three mounted ELLA6. It is therefore possible to substitute an ELLA L18 in place of three ELLA6s.

2.2.3 VERA S32

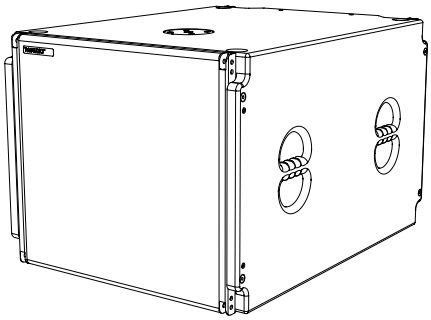

Drivers	1x 18“ LF front / 1x 14“ LF rear
Frequency response	38 - 120 Hz
Power handling (program/Peak)	2400 / 4800 W 18“ / 1400 / 2800 W 14“
Impedance	8 Ω 18“ / 8 Ω 14“
Max. SPL / 1m	134 dB
Dimensions (h x w x d)	506 x 600 x 800 mm [19.9 x 23.6 x 31.5 in]
Weight	54,2 kg [119.5 lbs]
Surface	Polyurea-coated

NOTE

System setups of the ELLA6 system can be operated with all bass loudspeakers from TW AUDiO that are equipped with a M20 pole mount flange.

3. Commissioning

3.1 Setup

The rigging components BPE6, PME6 and DTE6 are only designed for standing operation.

The rigging components RPE6, BMP150, LA150, SFE6 and SFE6-II are designed for hanging operation.

There are various accessories for all rigging components at TW AUDiO to securely attach them.

WARNING

Make sure that all system structures are located on a firm, level surface and that the surface can bear the total weight!

WARNING

Please note that setting up all rigging components always requires two persons!

NOTE

TW AUDiO recommends using only the accessories specified by TW AUDiO for securing and mounting loudspeakers.

3.2 Wind load

WARNING

Before setting up the system outdoors, consider unexpected wind conditions at the operation site!

Disassemble your system immediately when wind speeds exceed 8 bft (34 to 40 kn / 62 to 74 kph / 38.5 to 46 mph) and secure the system components!

Make sure that there are no persons in the immediate vicinity of the system structure!

WARNING

Make sure that the system structures are not operated over the audience at wind speeds in excess of 6 bft (22 to 27 kn / 39 to 49 kph / 24.2 to 30.45 mph) and that there are no persons in the immediate vicinity of the system structure!

3.3 Underground

WARNING

When setting up a system on uneven surfaces, such as gravel or grass, always put a pressure-resistant surface under all four spindle feet or the tripod legs! Make sure that all four spindle feet or the tripod legs rest completely on the pressure-resistant shims and that the surface can withstand the total weight!
Note that depending on the system design, either the front or rear spindle feet may be able to carry more weight!

3.4 Pitfalls

WARNING

Make sure that no one can trip over your system structures, or over individual components! This is especially true for all pressure-resistant shims, tripod legs, guy ropes and spindle feet!

3.5 Danger of tipping over

WARNING

With every system setup, make sure that the centre of gravity of the system never extends beyond the outer limits of the base area!

Secure every system setup against falling over!

WARNING

Any influences on your system setup, such as leaning against objects (or people) and flying objects around, be refrained from!

WARNING

The M20 pole mount flange, e.g. at VERA S32 loudspeaker is not designed for side forces once mounted – do not apply any pressure from the sides.

Make sure that no external forces are applied to the system structures. No objects or persons should lean against the structures, no objects should be thrown against them. If pressure is applied on the flange the loudspeaker may be damaged or falling over.

3.6 Rigging - general function

3.6.1 Operating the front locking mechanism

NOTE

The front rigging mechanism is opened (unlocked/undone) and closed (locked/secured) using push buttons on the side (see figure 3.6.1).

To open the front rigging mechanism, press the push button on both sides at the same time and slide the slider locks upwards.

Note that a bright orange dot is visible when the front rigging is OPEN.

To close the front rigging, move the slider down until the push buttons snap outwards. Check they have locked correctly in place.

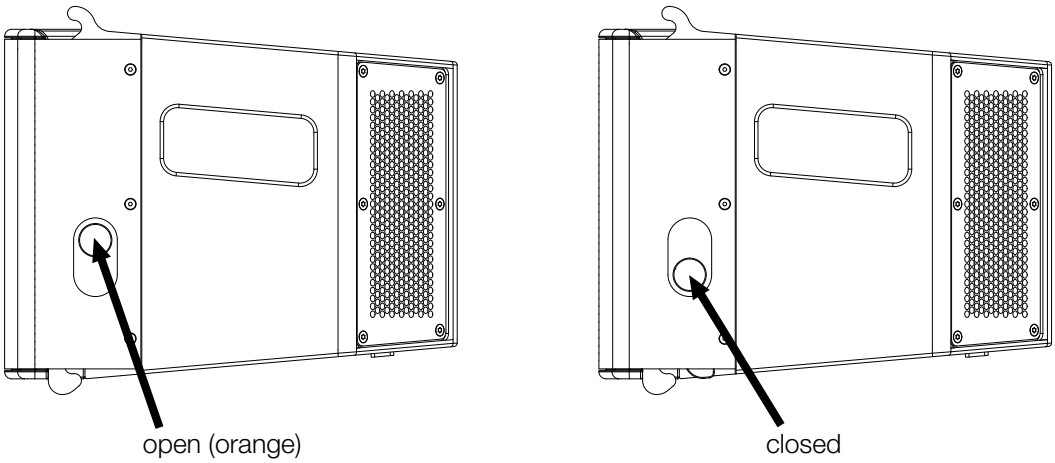

Figure 3.6.1 - Position front rigging

WARNING

When assembling all system setups, make sure that all front rigging sliders are in the CLOSED position after hooking together the ELLA6 speakers!

3.6.2 Operating the front rigging mechanism for ground stack operation

NOTE

Note that for all ELLA6 speakers that are to be operated for groundstack, the front rigging should be in the OPEN position before coupling each element together (see figure 3.6.1 - left).

WARNING

In groundstack operation, hold each ELLA6 speaker from above with both hands in the side recesses! Please note that fingers can be crushed if handled differently!

NOTE

Engage the hook of the front rigging of the upper ELLA6 speaker in a front to back motion into the hook of the lower ELLA6 speaker.

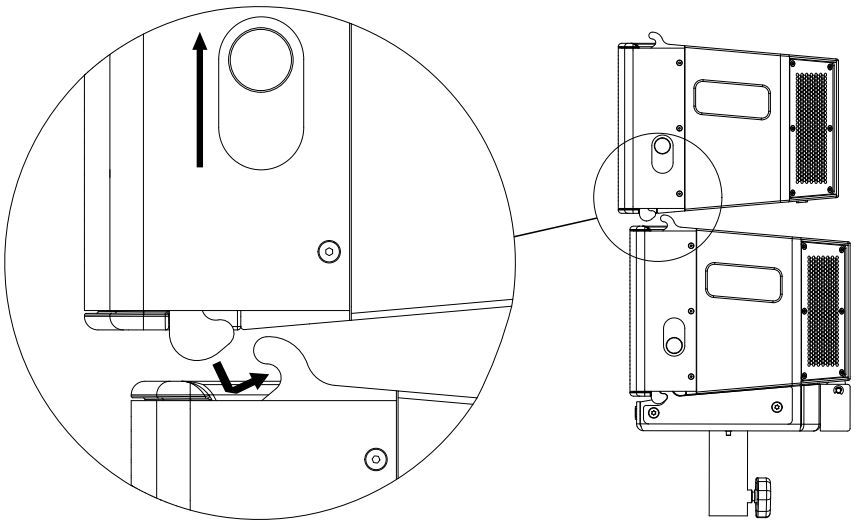

Figure 3.6.2.1 - Hook the front rigging from above

WARNING

After engaging the hooks of the ELLA6 speakers, close the front rigging on both sides with the slider locks!

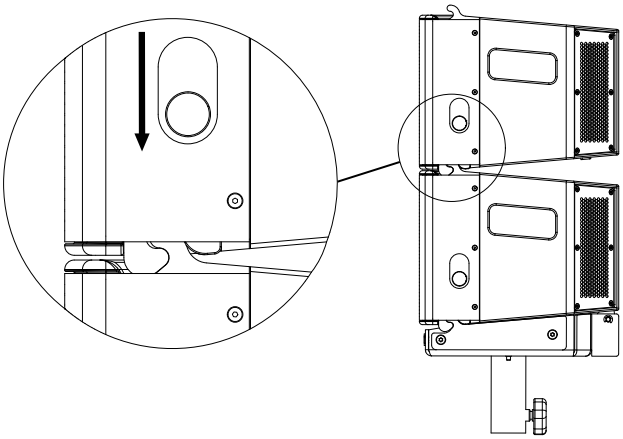

Figure 3.6.2.2 - Front rigging closed

3.6.3 Operating the front rigging mechanism for flying/suspended operation

NOTE

Note that for all ELLA6 speakers that are to be operated for flying, the front rigging should be in the OPEN position before coupling each element together (see figure 3.6.1 - left).

WARNING

In flying operation, hold each ELLA6 speaker from above with both hands in the side recesses! Please note that fingers can be crushed if handled differently!

Support the lower loudspeaker until you connected and locked both front and rear rigging!

NOTE

Engage the hook of the front rigging of the lower ELLA6 speaker in a back to front motion into the hook of the upper ELLA6 speaker.

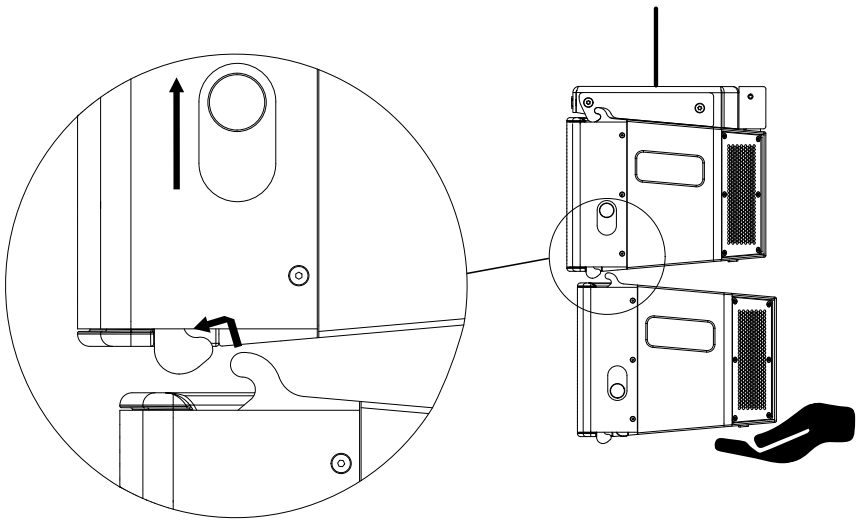

Figure 3.6.3.1 - Hook the front rigging from below

WARNING

After engaging the hooks of the ELLA6 speakers, close the front rigging on both sides with the slider locks!

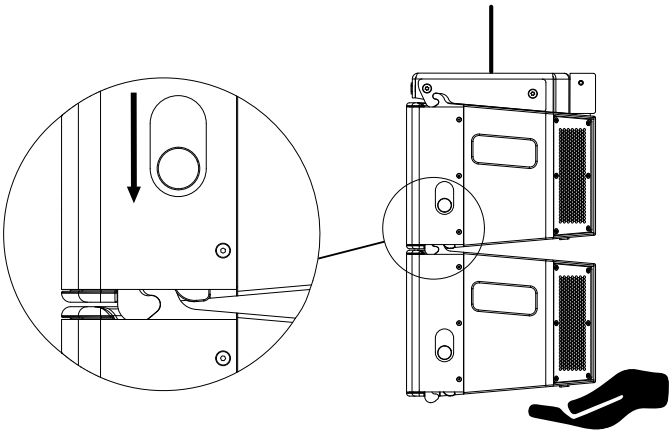

Figure 3.6.3.2 - Front rigging closed

3.6.4 Actuation of the locking bolt in the rear rigging

NOTE

1. Please ensure that with all ELLA6 speakers, the locking bolt is in the starting position with locking pins pointing upwards.

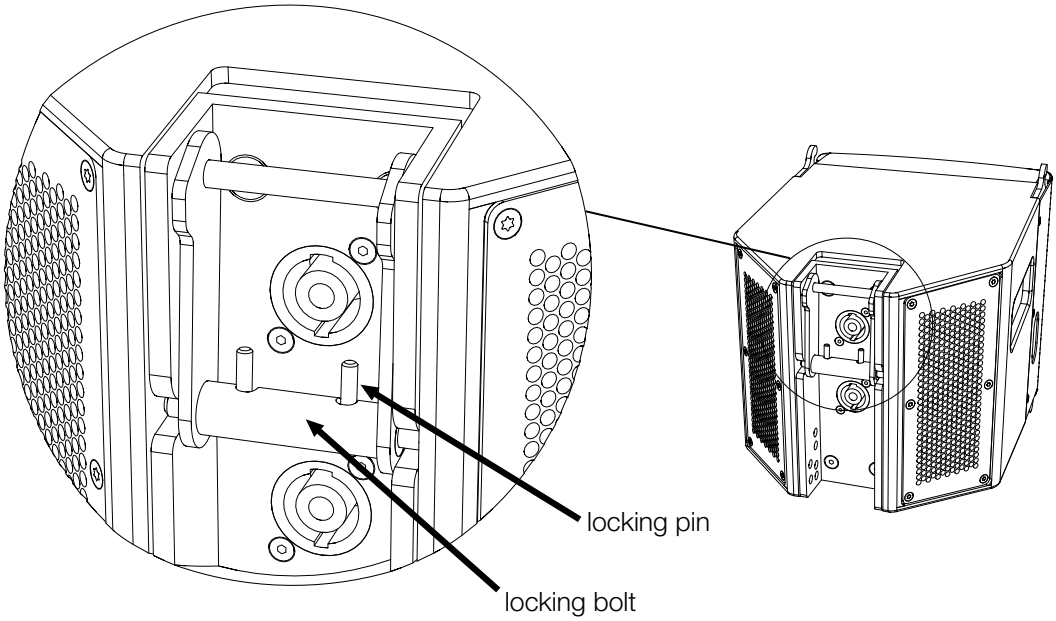

Figure 3.6.4.1 - Starting position of the locking bolt

NOTE

2. Place your thumb and forefinger between the locking pins and the cheeks of the locking bolt. Then press the two locking pins together and rotate them backwards by 90° towards the front of the loudspeaker.

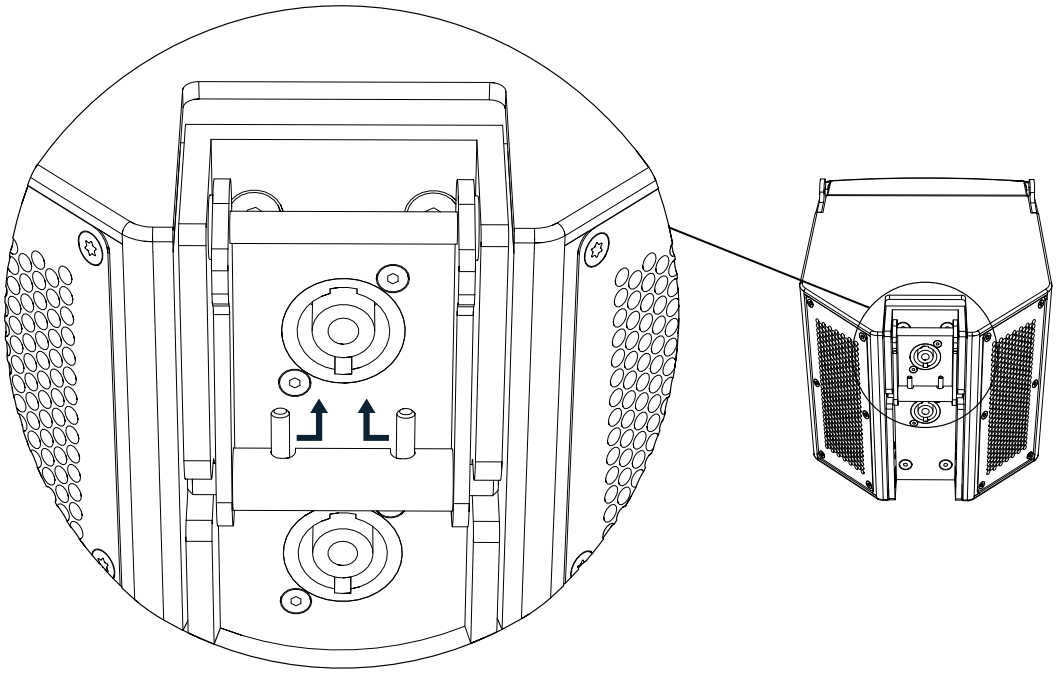

Figure 3.6.4.2 - Rotating locking pins backwards

NOTE

3. Swivel the locking bolt up with one hand and hold the upper ELLA6 loudspeaker in the recess with the other hand.

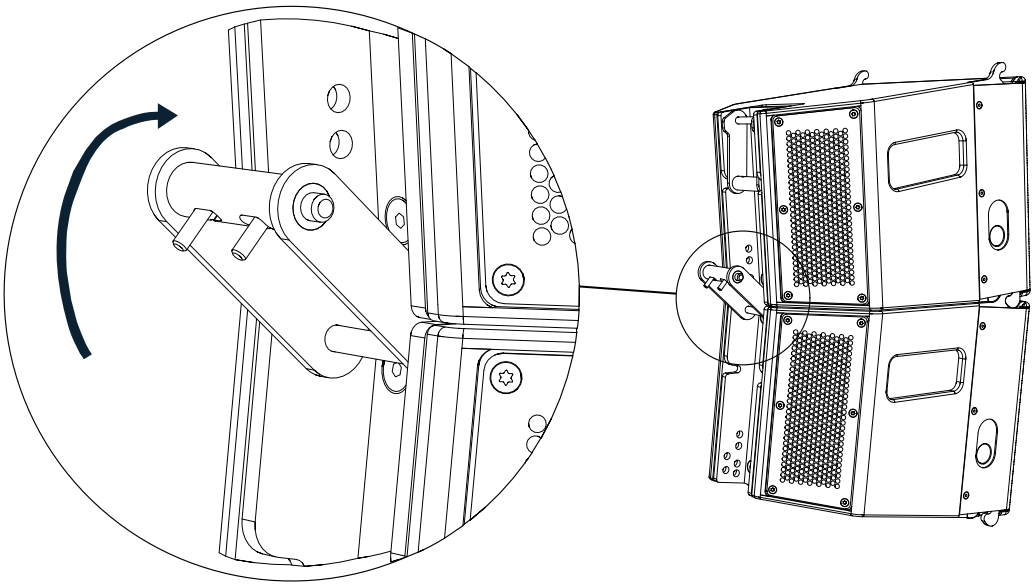

Figure 3.6.4.3 - Swivel the locking bolt up

NOTE

4. Use your thumb and forefinger to press the two locking pins together. Then lift the ELLA6 loudspeaker accordingly and swivel the locking bolt into the rear rigging rail so that the two bolts on the left and right engage in the holes of the corresponding number of degrees.

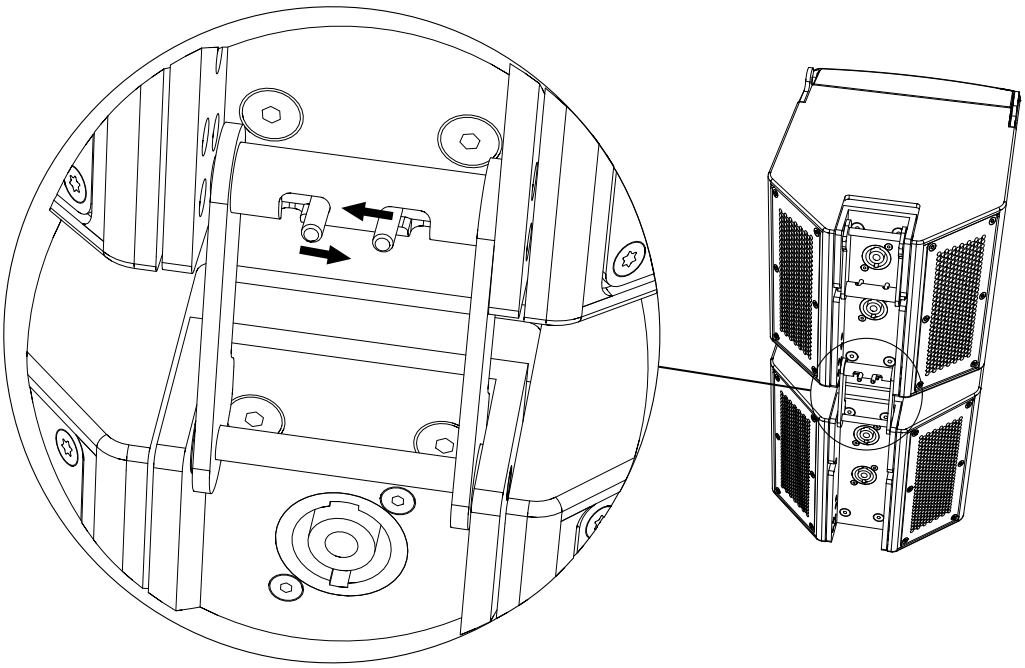

Figure 3.6.4.4 - Press the locking pins and swing the locking bolt inwards

WARNING

5. Make sure that both bolts of the locking bolt on the left and right are completely engaged in the rigging rail so that the locking pins lie in the guides on the outside.

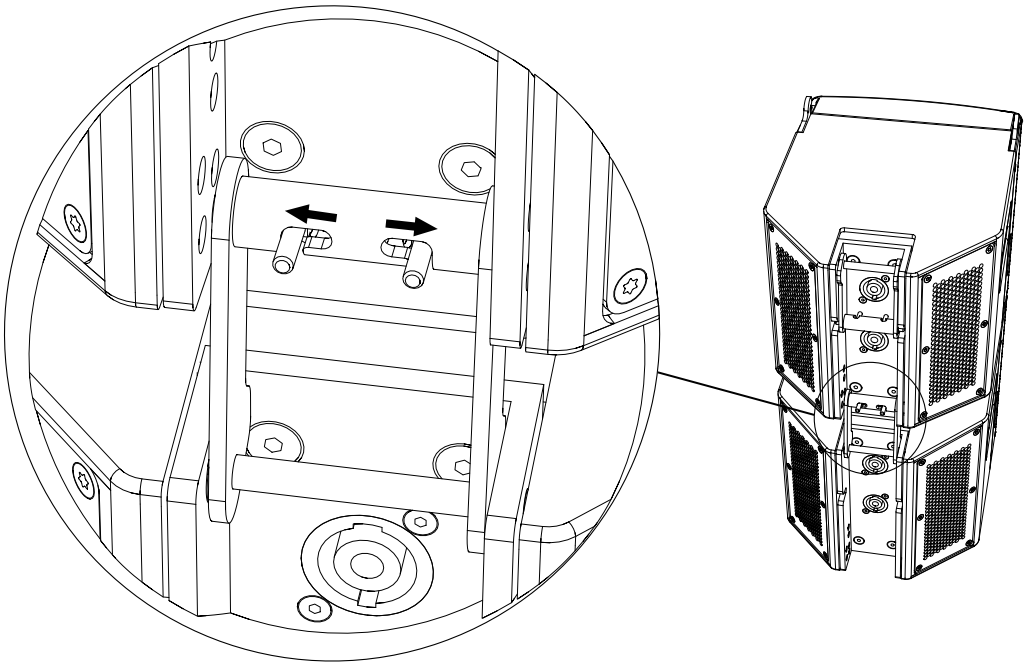

Figure 3.6.4.5 - Snap the bolts into place

WARNING

6. Then swivel the locking pins of the locking bolt down until they engage into place. The rear rigging is now locked. Check to ensure the pins are secure.

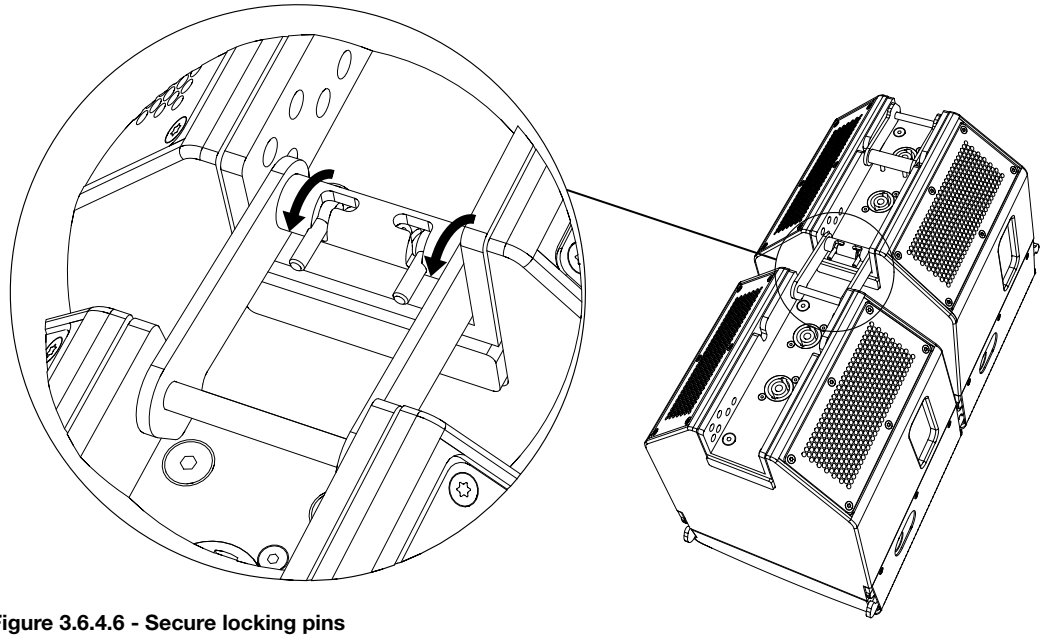

Figure 3.6.4.6 - Secure locking pins

3.7 BPE6 - mounting holes

The different holes of the BPE6 Baseplate E6 are explained below.

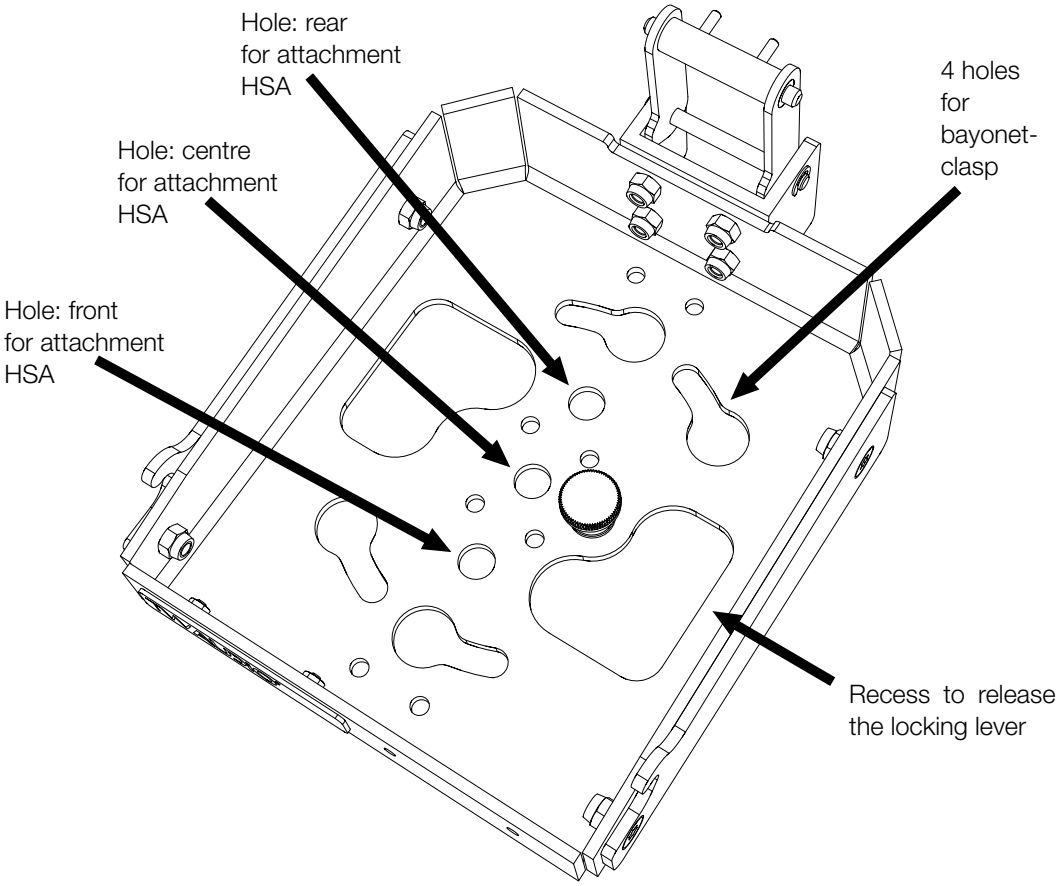

Figure 3.7 - Mounting holes BPE6

3.8 Down-tilt angles

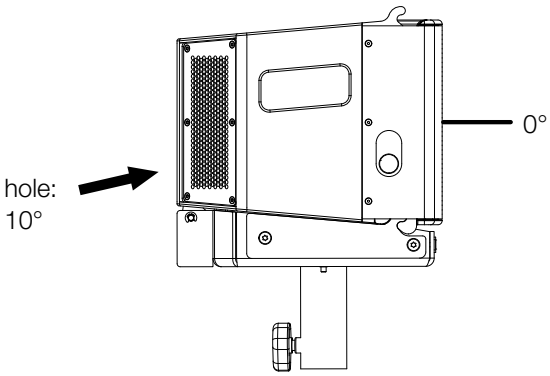

hole:	Down-tilt angle:
10°	0°
7°	3°
4,5°	5,5°
2,5°	7,5°
1°	9°
0°	10°

Figure 3.8 - Down-tilt angles

3.9 BPE6 - bayonet mount

Below you will find the bayonet clasp of the BPE6 Baseplate E6 in connection with the PME6 Pole-mount E6 explained.

NOTE

Place the BPE6 Baseplate on the PME6 Pole-mount so that the fitting screws of the PME6 engage in the bayonet lock holes of the BPE6.

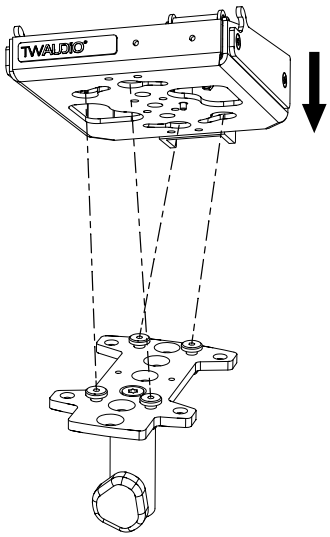

Figure 3.9.1 - Set BPE6 on PME6

WARNING

Then turn the BPE6 Baseplate until the locking lever audibly and physically engages.
The bayonet clasp is now closed.

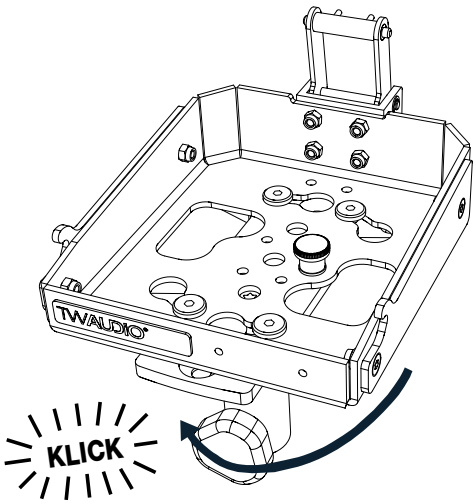

Figure 3.9.2 - Snap BPE6 onto PME6

3.10 Ground stack mode

Below you will find an explanation of the different ground stack variants that you can implement with the ELLA6 system.

NOTE

Please note that when you set up the ELLA6 system, you have different options for combining the individual accessories. To do this, follow the assembly instructions under the individual points.

3.10.1 Tripod / distance rod / design stand

General safety instructions for setting up all ground stack modes on a tripod or distance rod:

NOTE

Use the EASE Focus simulation software to determine the number and degrees, the ELLA6 or ELLA L18 speakers that match your application, and the attachment point of the tripod / distance rod

WARNING

For all system setups, it is essential to observe chapters: 3.2 to 3.5.

WARNING

Note that a maximum of eight ELLA6 (or a combination of two ELLA6 plus one ELLA L18) speakers can be mounted on the BPE6 baseplate if the gound-stack array has been mounted on a speaker stand or on a design stand.

WARNING

For every system setup in ground stack mode, use a tripod that is designed according to the total weight.

WARNING

For each system setup, make sure that a maximum of three ELLA6 loudspeakers assembled beforehand are installed on the system setup!

a) BPE6 + HSA

Mount the HSA pole mount adaptor in the appropriate hole of the BPE6 Baseplate E6 (according to the simulation software EASE Focus) using the enclosed wing nut. Then put both on a tripod or a distance rod.

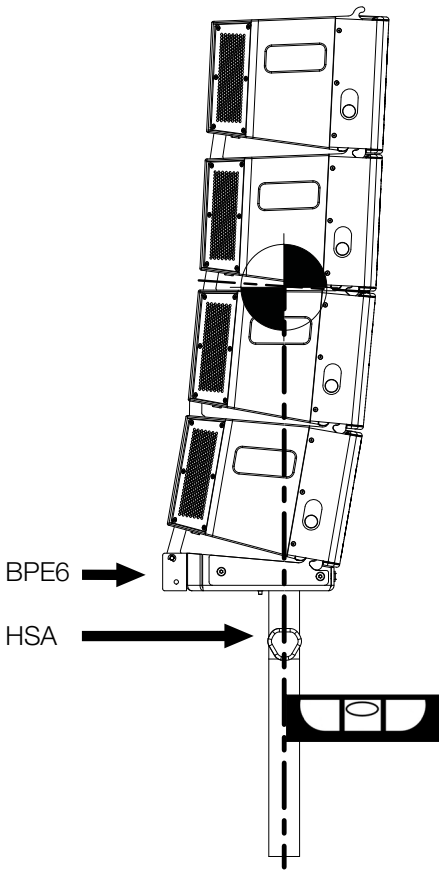

Figure 3.10.1.1 -
System setup ground stack,
centre of gravity on tripod

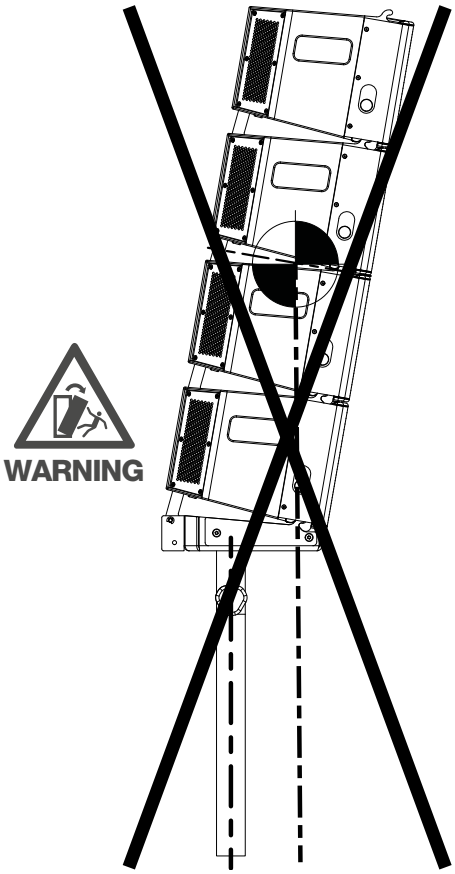

Figure 3.10.1.2 -
System setup groud stack,
centre of gravity outside tripod

Please note that the centre of gravity of the system setup must always be in the area of the tripod!

b) BPE6 + PME6

Place the PME6 Polemount E6 on a tripod or a distance rod. Then place the BPE6 Baseplate E6 on the PME6 as explained in chapter 3.9. Make sure that the locking lever audibly engages and the bayonet clasp is closed.

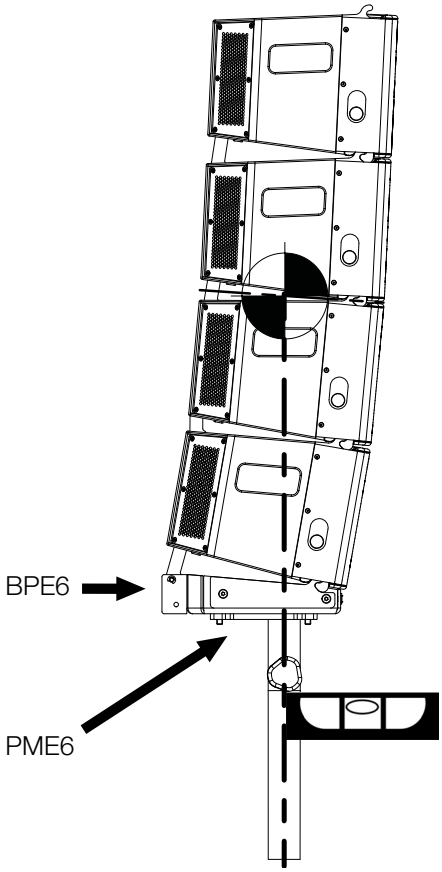

Figure 3.10.1.3 -
System setup ground stack,
centre of gravity on tripod

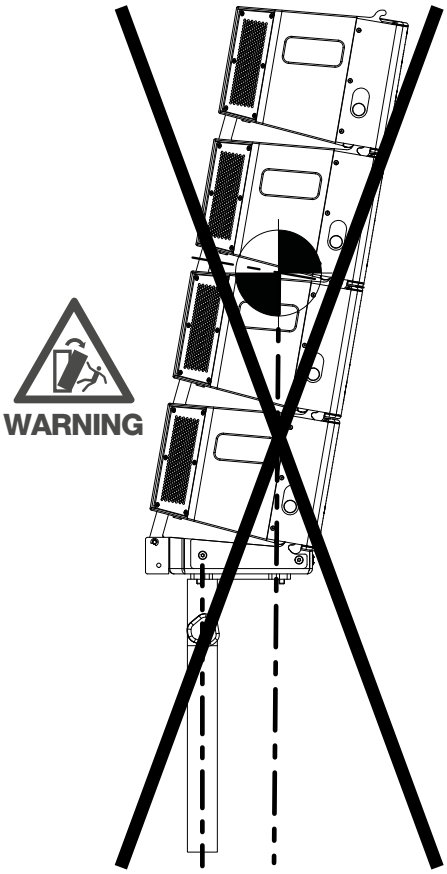

Figure 3.10.1.4 -
System setup groud stack,
centre of gravity outside tripod

Please note that the centre of gravity of the system setup must always be in the area of the tripod!

c) BPE6 + Design stand

WARNING

Fasten the BPE6 Baseplate E6 to the Design stand using a hexagon screw and a washer.

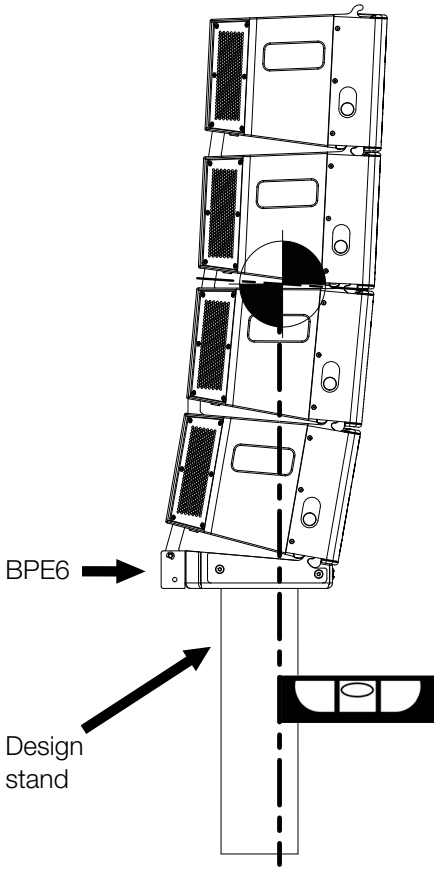

Figure 3.10.1.5 -
System setup ground stack,
centre of gravity on Design stand

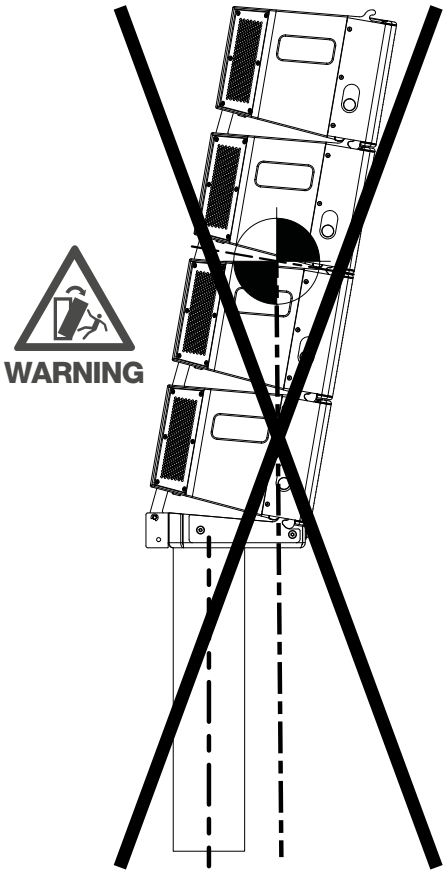

Figure 3.10.1.6 -
System setup groud stack,
centre of gravity outside Design stand

WARNING

Please note that the centre of gravity of the system setup must always be in the area of the Design stand!

3.10.3 Downtilt-adaptor

General safety instructions for setting up all groundstack modes:

NOTE

Use the EASE Focus simulation software to determine the number and degrees that match the ELLA6 speakers for your application.

WARNING

For all system setups, it is essential to observe chapters: 3.2 to 3.5.

WARNING

Please note that a maximum of six ELLA6 speakers can be mounted on the DTE6 Downtilt-adaptor.

WARNING

Please note that a maximum of five ELLA6 or one ELLA L18 speakers can be mounted on the BPE6 Baseplate if the gound-stack array has been mounted on a tripod or disign stand.

WARNING

For each system setup, make sure that a maximum of three ELLA6 loudspeakers assembled beforehand are installed on the system setup!

a) Angle settings DTE6

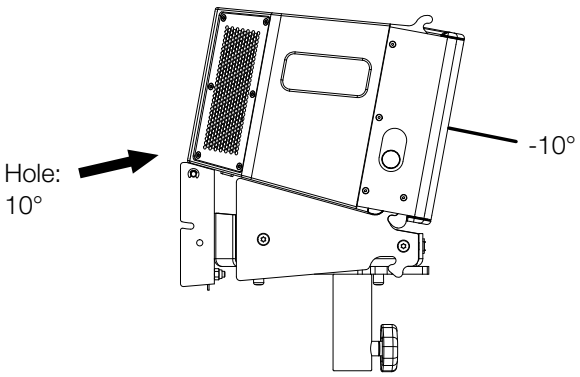

Hole:	Downtiltangle:
10°	-10°
7°	-13°
4,5°	-15,5°
2,5°	-17,5°
1°	-19°
0°	-20°

Figure 3.10.3.1 - Downtiltangle

b) DTE6

WARNING

Place the BPE6 Baseplate E6 on the PME6 Polemount E6 as explained in chapter 3.9. Make sure that the locking lever audibly engages and the bayonet clasp is closed.

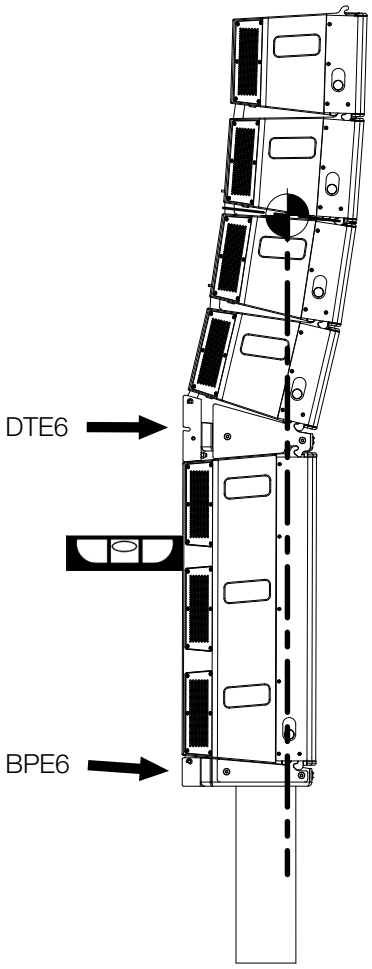

Figure 3.10.3.2 -
System setup ground stack,
centre of gravity over design stand

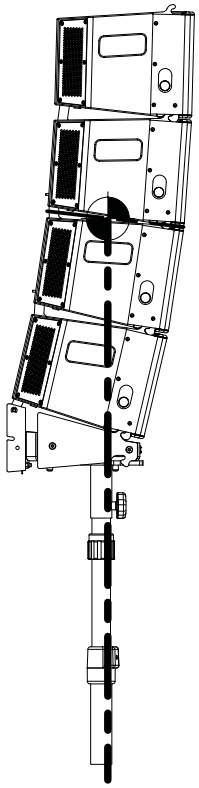

Figure 3.10.3.3 -
System setup groud stack,
centre of gravity over tripod

WARNING

Please note that the centre of gravity of the system setup must always be in the area of the design stand or tripod!

3.11 RPE6 - mounting holes

The different holes of the RPE6 Riggingplate E6 are explained below.

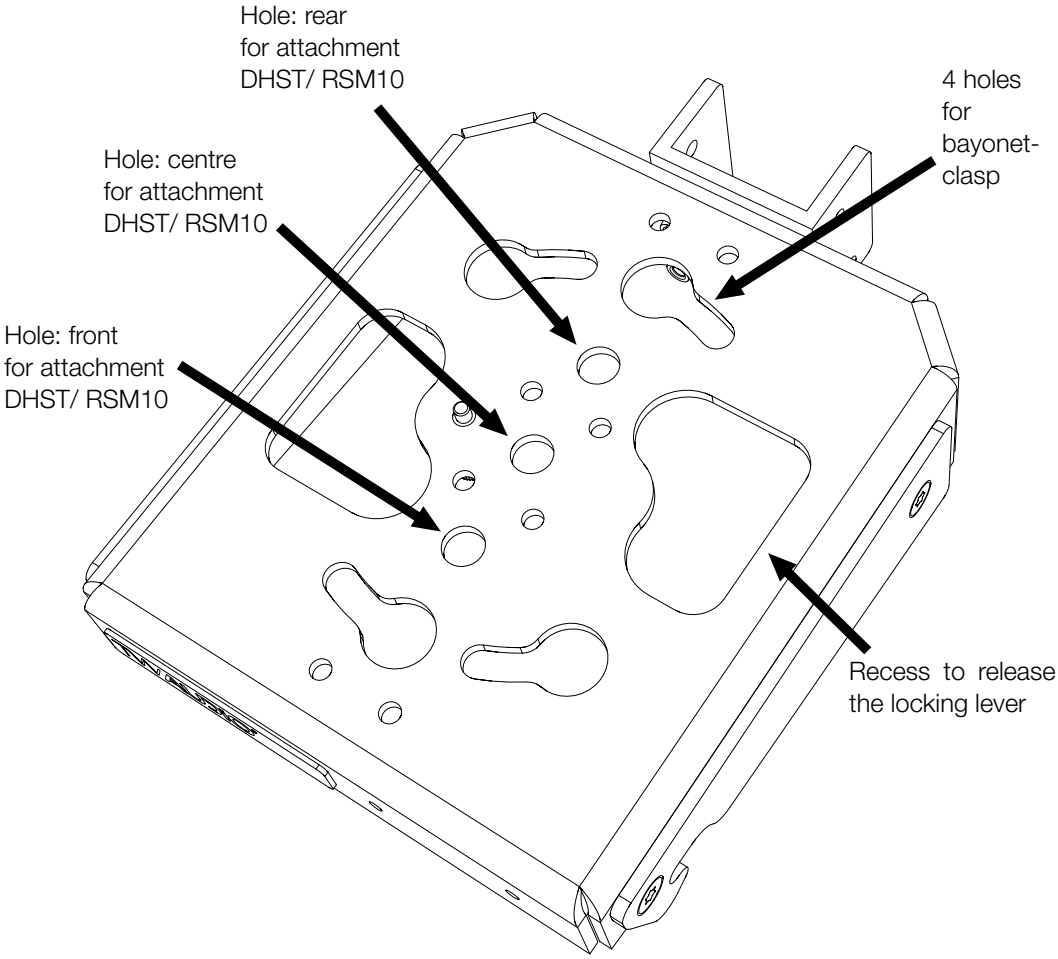

Figure 3.11 - Mounting holes RPE6

3.12 0°- axis ELLA6

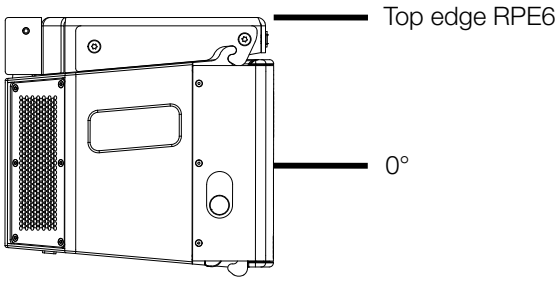

Figure 3.12 - 0°- axis ELLA6

NOTE

Note that the top edge of the RPE6 Riggingplate E6 is always parallel to the 0° axis of the ELLA6.

3.13 RPE6 - bayonet mount

The bayonet clasp of the RPE6 Riggingplate E6 is explained below.

NOTE

Place the RPE6 Riggingplate E6 on the BMP150 Bumper 150 so that the dowel screws of the BMP150 engage in the bayonet clasp holes of the RPE6.

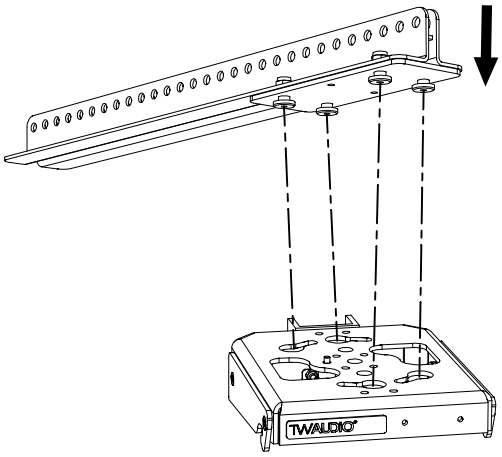

Figure 3.13.1 - Set BMP15 on RPE6

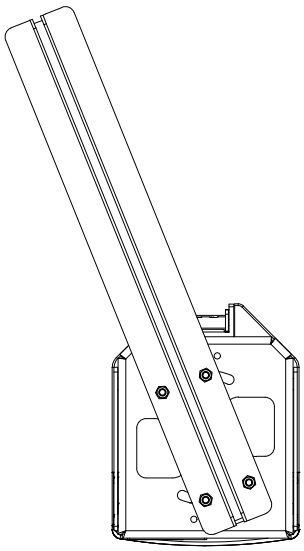

Figure 3.13.2 - Top view: set BMP150 on RPE6

WARNING

Then turn the BMP150 Bumper E6 until the locking lever of the RPE6 Riggingplate E6 audibly and physically engages. The bayonet clasp is now closed.

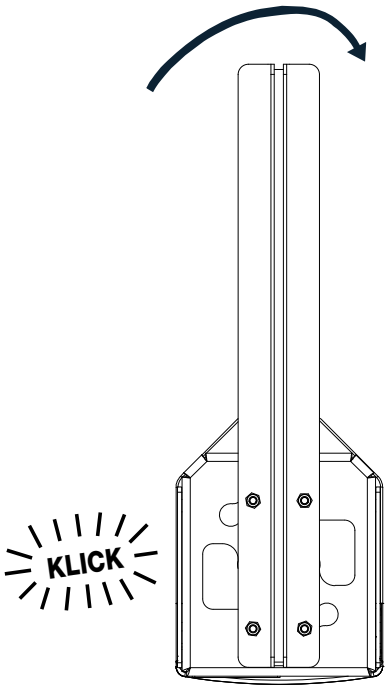

Figure 3.13.3 - Snap BMP150 onto RPE6

WARNING

Check that the pin of the locking lever of the RPE6 Riggingplate E6 is locked in the hole of the BMP150 Bumper E6.

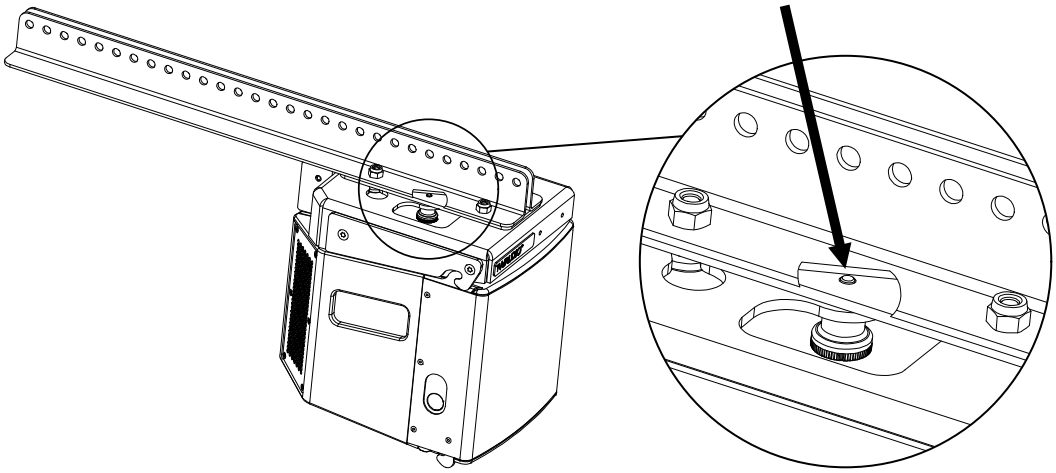

Figure 3.13.4 - Pin of the locking lever engaged

3.14 Rigging-mode with DHST and RSM10

Below you will find explanations of the various rigging variants with DHST and RSM10 that you can implement with the ELLA6 system.

NOTE

Please note that when you set up the ELLA6 system, you have different options for combining the individual accessories. To do this, follow the assembly instructions under the individual points.

General safety instructions for the setup of these rigging variants:

NOTE

Use the EASE Focus simulation software to determine the number and degrees that match the ELLA6 loudspeakers for your application.

WARNING

For all system setups, it is essential to observe chapters: 3.2 to 3.5.

WARNING

Please note that a maximum of four ELLA6 (or a combination of one ELLA6 plus one ELLA L18) loudspeaker can be mounted under the RPE6 rigging plate if the rigging array was installed using DHST or RSM10.

WARNING

Use a DHST or RSM10 that is designed according to the payload for each system setup.

WARNING

For each system setup, make sure that a maximum of three ELLA6 loudspeakers assembled beforehand are installed on the system setup!

Please also note that two people are always required for this as soon as three previously assembled ELLA6 oudspeakers are installed on a system setup!

1st person:
Hold the three previously assembled ELLA6 loudspeakers in your arms and hook these into the previous system setup as described in chapter 3.6.3. Keep holding the setup until the second person has closed the front rigging!

2nd person:
Close the front rigging on both sides, as shown in chapter 3.6.1, after the three previously assembled ELLA6 loudspeakers are located into the previous system setup!

a) DHST + RPE6

Mount the DHST Doughty Halfcoupler Slimline on the RPE6 Riggingplate E6 using the hexagon screw and stop nut supplied with the DHST.

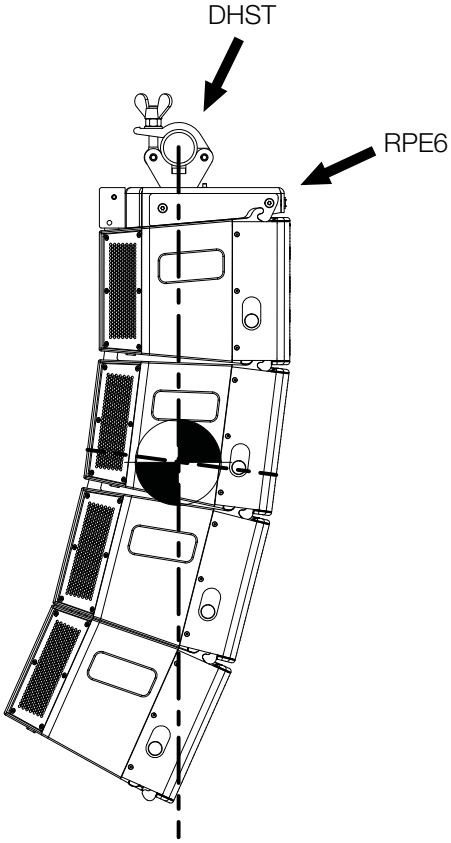

Figure 3.14.1.1 -
System setup rigging-mode with DHST, allowed

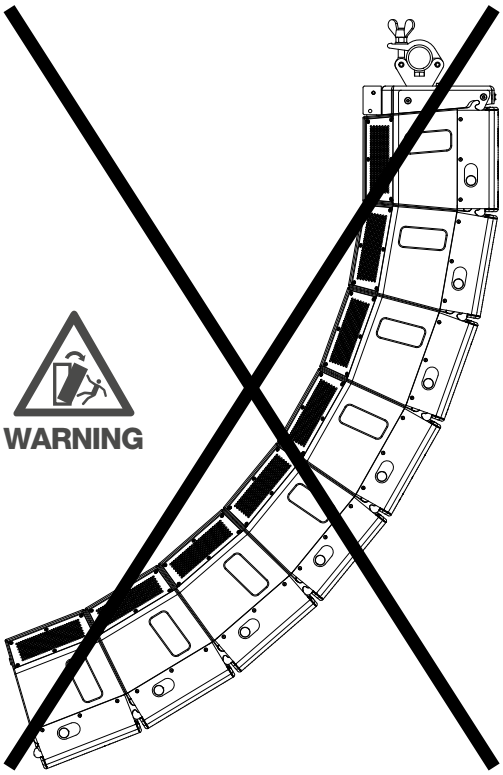

Figure 3.14.1.2 -
System setup rigging-mode with DHST, not permitted

Please note that the centre of gravity of the system setup must always be in the area of the DHST Doughty Halfcoupler Slimline!

b) RSM10 + RPE6

WARNING

Mount the RSM10 on the RPE6 Riggingplate E6 using an additional hexagon nut M10.

WARNING

Secure the M10 hexagon nut to the RSM10 using screw locking lacquer so that the hexagon nut cannot loosen.

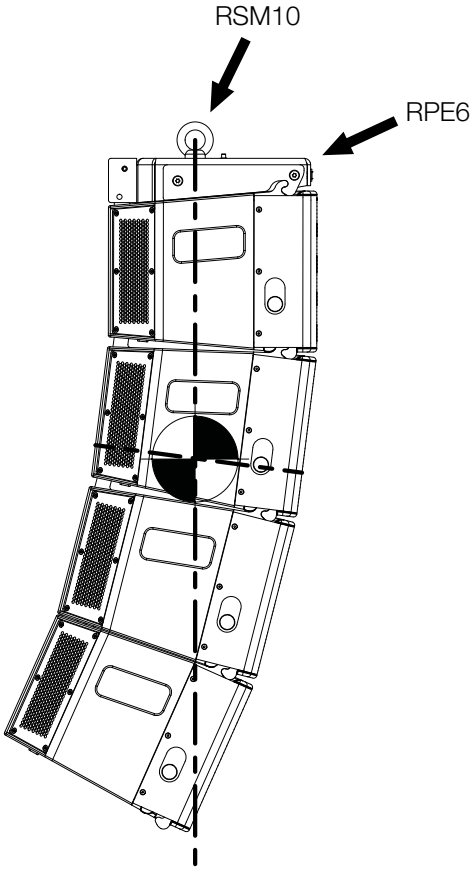

Figure 3.14.1.3 -
System setup rigging-mode with RSM10,
allowed

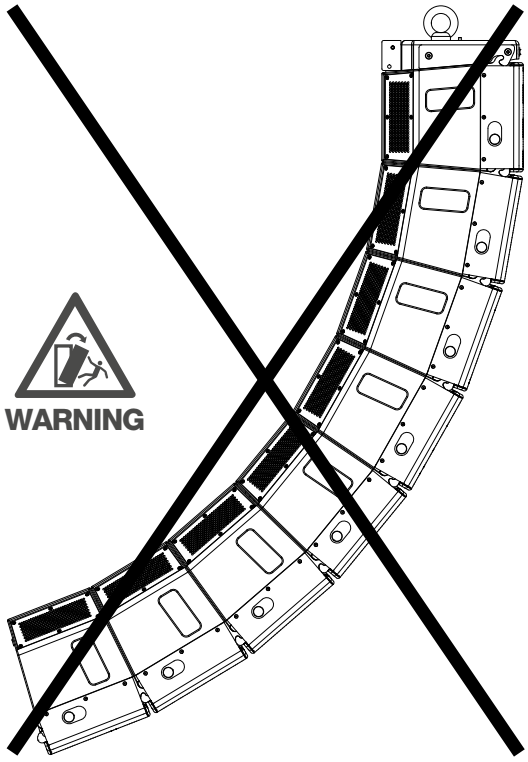

Figure 3.14.1.4 -
System setup rigging-mode with RSM10,
not permitted

WARNING

Please note that the centre of gravity of the system setup must always be in the area of the RSM10!

3.15 Rigging-mode with SFE6

General safety instructions for the setup of this rigging variant:

NOTE

Use the simulation software EASE Focus to determine the number and degrees, the speaker of the ELLA6 system which matches your application, and the appropriate pin point of the smallframe.

WARNING

For all system setups, it is essential to observe chapters: 3.2 to 3.5.

WARNING

Please note that a maximum of 12 ELLA6 or four ELLA L18 loudspeakers are allowed to be mounted under the SFE6 Smallframe.

WARNING

Use shackles that are designed according to the payload for each system setup.

WARNING

Fasten the SFE6 Smallframe with a shackle and chain hoist according to the pin points. The pin points are marked with numbers.

NOTE

For the secondary safety component, the respective national electrotechnical regulations apply.

WARNING

Attach this secondary safety component by using a second shackle, chain sling or chain hoist on another pin point.

WARNING

For each system setup, make sure that a maximum of three ELLA6 loudspeakers assembled beforehand are installed on the system setup!

Please also note that two people are always required for this as soon as three previously assembled ELLA6 loudspeakers are installed on a system setup!

1st person:
Hold the three previously assembled ELLA6 loudspeakers in your arms and hook these into the previous system setup as described in chapter 3.6.3. Keep holding the setup until the second person has closed the front rigging!

2nd person:
Close the front rigging on both sides, as shown in chapter 3.6.1, after the three previously assembled ELLA6 loudspeakers are located into the previous system setup!

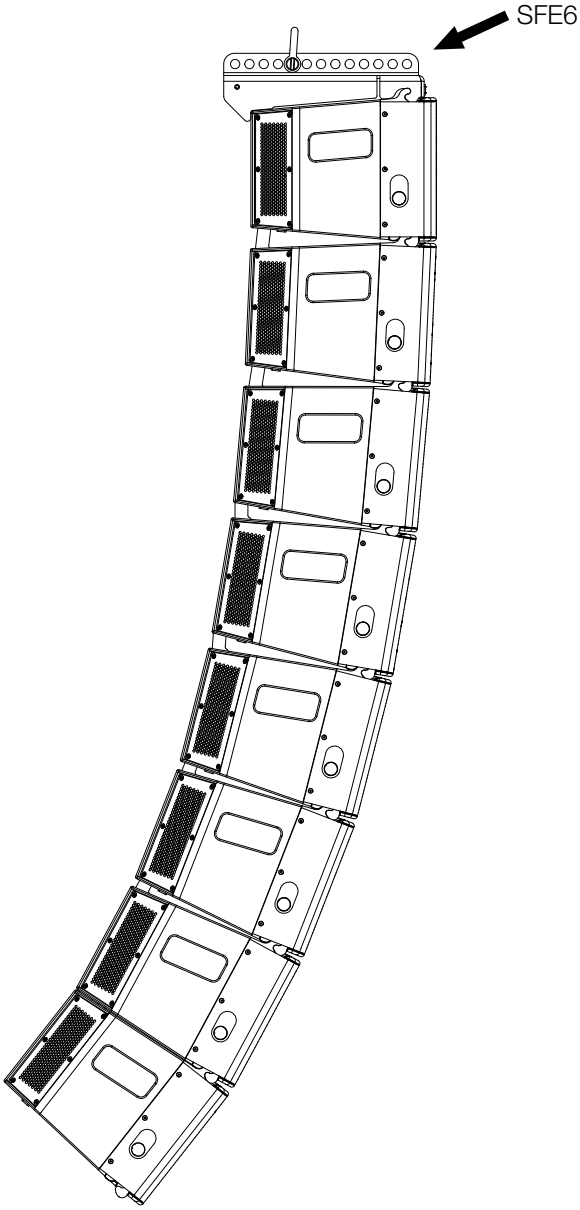

Figure 3.15.1 - System setup rigging-mode with SFE6

3.16 Rigging-mode with SFE6-II

General safety instructions for the setup of this rigging variant:

NOTE

Use the simulation software EASE Focus to determine the number and degrees, the speaker of the ELLA6 system which matches your application, and the appropriate pin point of the smallframe.

WARNING

For all system setups, it is essential to observe chapters: 3.2 to 3.5.

WARNING

Please note that a maximum of 12 ELLA6 or four ELLA L18 loudspeakers are allowed to be mounted under the SFE6-II Smallframe.

WARNING

Use shackles that are designed according to the payload for each system setup.

WARNING

Fasten the SFE6-II Smallframe with a shackle and chain hoist according to the pin points. The pin points are marked with numbers.

NOTE

For the secondary safety component, the respective national electrotechnical regulations apply.

WARNING

Attach this secondary safety component by using a second shackle, chain sling or chain hoist on another pin point.

WARNING

For each system setup, make sure that a maximum of three ELLA6 loudspeakers assembled beforehand are installed on the system setup!

Please also note that two people are always required for this as soon as three previously assembled ELLA6 loudspeakers are installed on a system setup!

1st person:
Hold the three previously assembled ELLA6 loudspeakers in your arms and hook these into the previous system setup as described in chapter 3.6.3. Keep holding the setup until the second person has closed the front rigging!

2nd person:
Close the front rigging on both sides, as shown in chapter 3.6.1, after the three previously assembled ELLA6 loudspeakers are located into the previous system setup!

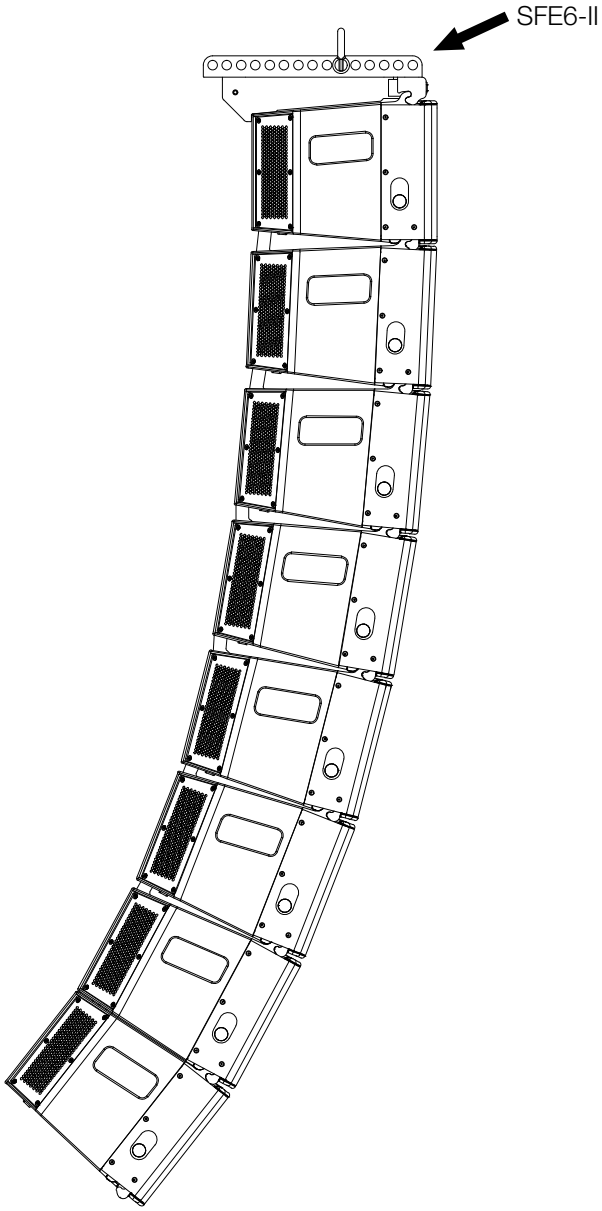

Figure 3.16.1 - System setup rigging-mode with SFE6-II

3.17 Use LA150 Loadadaptor 150 in the flown system

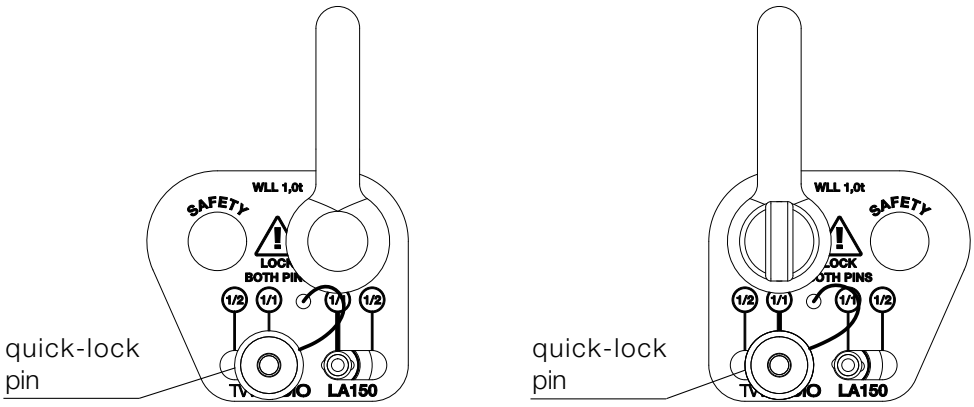

Figure 3.17.1 - LA150 load adaptor

WARNING

Two quick-lock pins are attached to the LA150 Load adaptor.

Attach the LA150 Load adaptor to the BMP150 Bumper with both quick-lock pins!

NOTE

Use the EASE Focus simulation software to select the pin point which is right for your application.

The two integrated slots of the LA150 Load adaptor allow both integer and half-integer settings.

The marker on the shackle on the LA150 Load adaptor indicates the currently selected value. This can clearly be seen in figure 3.16.3 and 3.16.4.

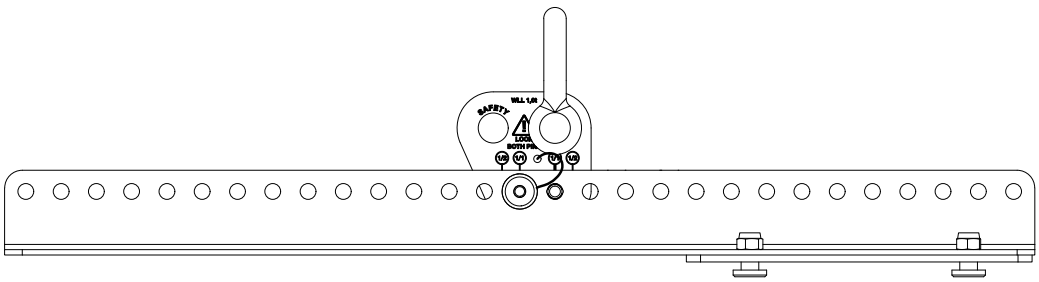

Figure 3.17.2 - Side view BMP150 Bumper with LA150 Load adaptor

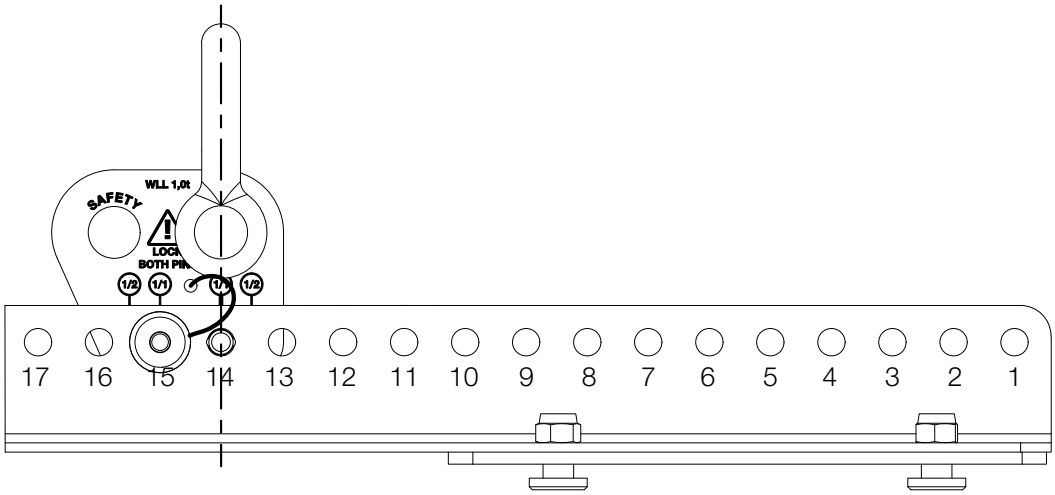

Figure 3.17.3 - LA150 Load adaptor on position pin point 14 - alignment forward

With the LA150 Load adaptor alignment forward, the quick-lock pins inserted in 14 and 15 result in a pin point of 14.

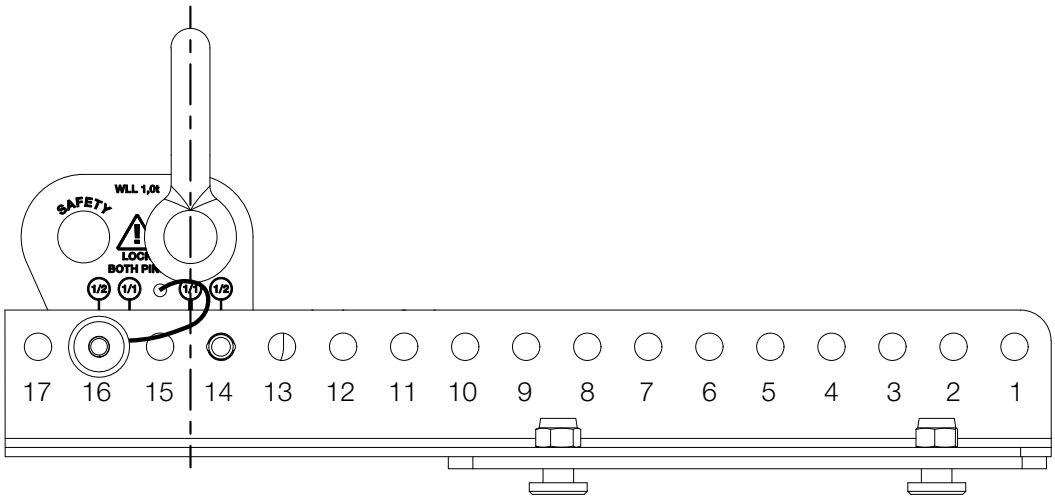

Figure 3.17.4 - LA150 Load adaptor on position pin point 14,5 - alignment forward

If the quick-lock pin of the LA150 Load adaptor is changed from 15 to 16, the result is a pin point of 14.5.

3.18 Secondary safety component

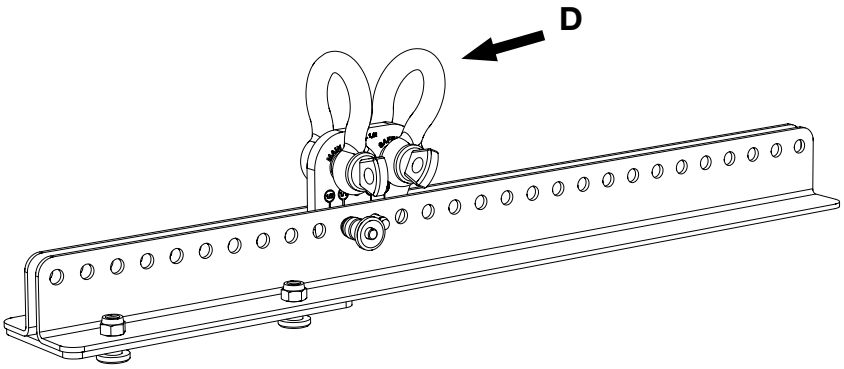

Figure 3.18.1 - Secondary safety component

NOTE

For the secondary safety component, the respective national electrotechnical regulations apply.

WARNING

Fasten the LA150 Load adaptor with the hole - main load, in the direction of the RPE6 Riggingplate E6 or in the direction of hole1. Attach a second shackle as a secondary safety component in the hole - safety, point D. However, if the main load of the setup is after hole 27, then fix the LA150 Load adaptor upside down so that the secondary safety component is in front of the main load hole.

Attach the LA150 Loadadaptor to the BMP150 Bumper with both quick-lock pins!

Save the complete system e.g. with safety chains.

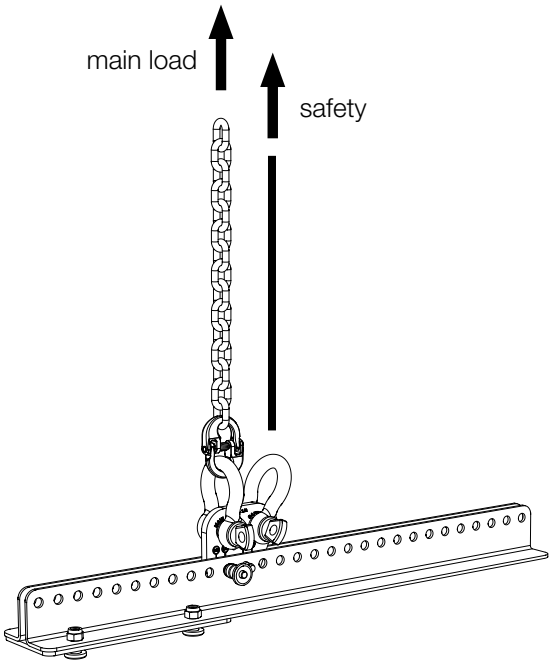

Figure 3.18.2 - Secondary safety component example

3.19 Rigging-mode with RPE6 and BMP150 and LA150

General safety instructions for the setup of this rigging variant:

NOTE

Use the simulation software EASE Focus to determine the number and degrees, the speaker of the ELLA6 system which matches your application, and the appropriate pin point of the bumper.

WARNING

For all system setups, it is essential to observe chapters: 3.2 to 3.5.

WARNING

Please note that a maximum of 24 ELLA6 or eight ELLA L18 loudspeakers are allowed to be mounted under the RPE6 Riggingplate if the rigging array was installed using LA150 and BMP150.

WARNING

Fasten the BMP150 Bumper using the LA150 Load adaptor and shackle and chain hoist according to the pin points. The pin points are marked with numbers.

NOTE

For the secondary safety component, the respective national electrotechnical regulations apply.

WARNING

Attach this secondary safety component to the safety hole of the LA150 Load adaptor using a second shackle, chain sling or chain hoist.

WARNING

Use shackles that are designed according to the payload for each system setup.

WARNING

For each system setup, make sure that a maximum of three ELLA6 loudspeakers assembled beforehand are installed on the system setup!

Please also note that two people are always required for this as soon as three previously assembled ELLA6 loudspeakers are installed on a system setup!

1st person:
Hold the three previously assembled ELLA6 loudspeakers in your arms and hook these into the previous system setup as described in chapter 3.6.3. Keep holding the setup until the second person has closed the front rigging!

2nd person:
Close the front rigging on both sides, as shown in chapter 3.6.1, after the three previously assembled ELLA6 loudspeakers are located into the previous system setup!

WARNING

First mount the RPE6 Riggingplate E6 on the BMP150 Bumper as explained in chapter 3.14. Make sure that the locking lever audibly and physically engages and the bayonet clasp is closed.

WARNING

Then attach the LA150 Load adaptor to the BMP150 using the two quick-lock pins.

Make sure that all quick-lock pins are always completely inserted!

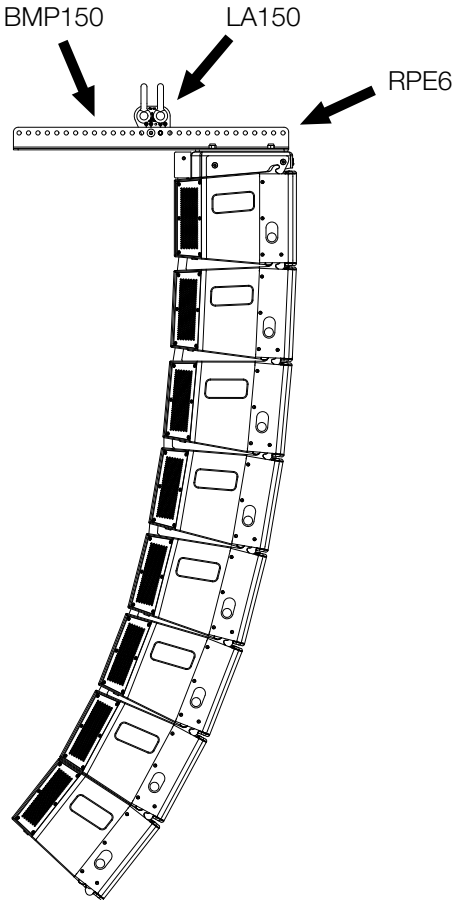

Figure 3.19.1 - System setup rigging-mode with LA150, BMP150 and RPE6

3.20 CaseE6

With the CaseE6 you are able to transport a complete ELLA6 system. It offers storage space for 4x three ELLA6 system setups or four ELLA L18 loudspeakers, cables and rigging accessories. The following pages explain how you can use the CaseE6:

NOTE

Place the BPE6 Baseplate E6 and the RPE6 Riggingplate E6 on top of each other as shown in figure 3.20.1. Then hold the two plates with both hands on the right and left. Then insert the two plates vertically into the CaseE6.

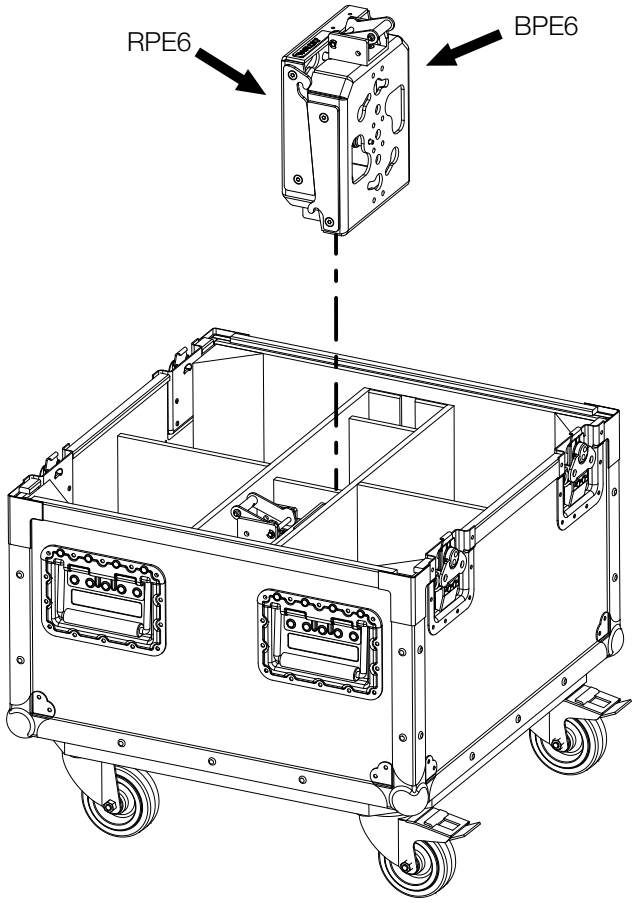

Figure 3.201 - Insert BPE6 and RPE6 in the CaseE6

NOTE

Note that you can insert 4x three pre-assembled ELLA6 loudspeakers or four ELLA L18 loudspeakers into the CaseE6.

Before doing this, set the rear rigging to 0° for all four ELLA6 system setups assembled previously.

NOTE

Before equipping the CaseE6, remove the cables from all ELLA6 loudspeakers.
These can then be stored in the insert, as explained in figure 3.20.3.

NOTE

Ensure that the ELLA6 or ELLA L18 loudspeakers can dry out after each use in damp conditions in a dry, well-ventilated place. When doing so, the speakers must be removed from the case to provide adequate ventilation.

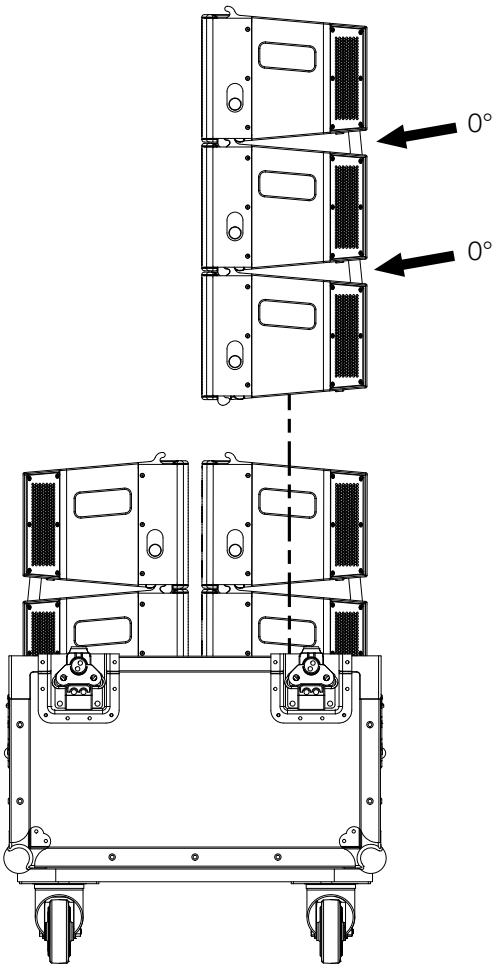

Figure 3.20.2 - Equip CaseE6 with ELLA6

NOTE

Place the insert supplied with the CaseE6 back in the middle between the ELLA6 loudspeakers. Place all small parts such as two LA150 Load adaptor or your speaker cables in this insert. This insert is designed so that it fits exactly over the two areas for the BPE6 Baseplate E6 and RPE6 Riggingplate E6.

NOTE

Insert the two BMP150 Bumper into the holding grooves provided on the left and right of the insert. The two BMP150 are secured during transport and cannot tip against the ELLA6 or ELLAL18 loudspeakers.

NOTE

Insert the two PME6 Polemount E6 into the holding grooves provided on the top left and right of the insert. The two PME6 are secured during transport.

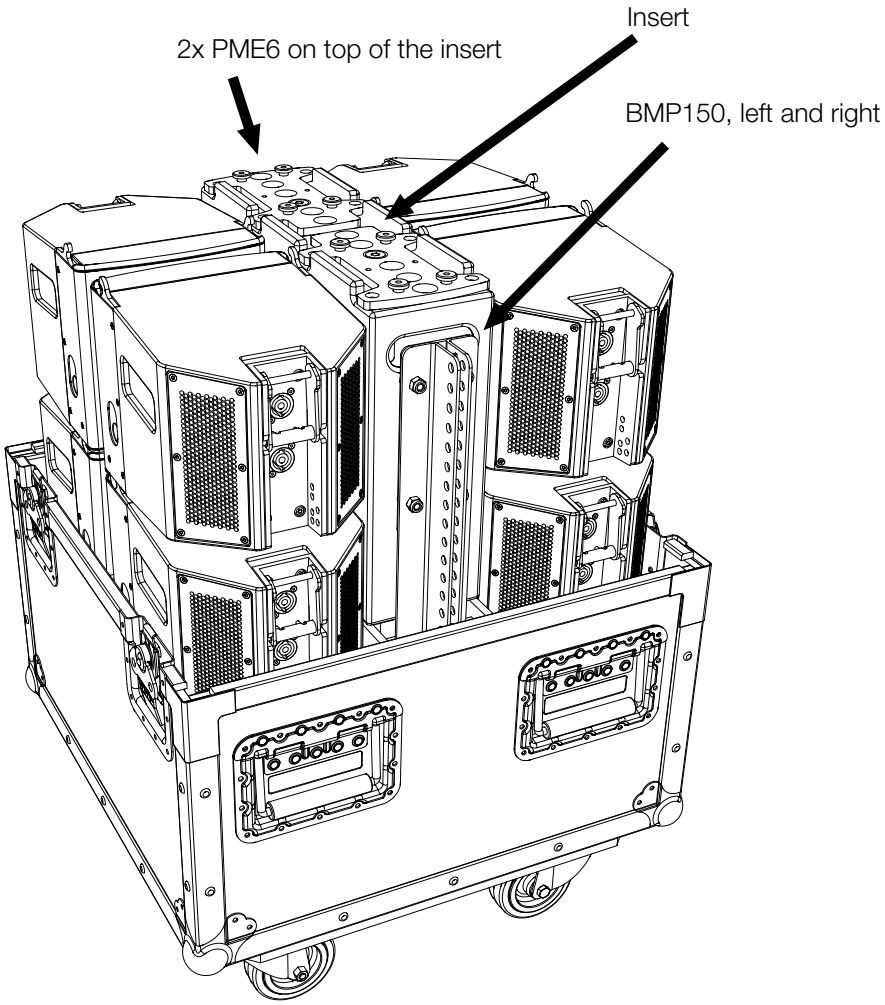

Figure 3.20.3 - CaseE6 equipped

4. Transport and Storage

NOTE

Ensure that the surfaces of all rigging components are not damaged during transport and storage. Moisture may penetrate where steel surfaces are exposed by scratches and result in corrosion.

For this reason, the loudspeakers should be transported and stored in a safe, careful, dry and largely dust-free manner.

The following accessory parts for the various rigging components are available from TWAUDiO:

- HSA (Tripod adapter)
- DHST (Half-coupler Slimline)
- CaseE6 (Case for 4x 3 ELLA6 or 4x ELLA L18, including accessories)
- Bag3E6 (bag for 3 ELLA6 or one ELLA L18)

The original packaging is unsuitable as permanent storage and transport packaging.

5. CE Conformity Declaration

Copy and translation of the original CE Conformity Declaration:

We hereby declare that the below-referenced components by virtue of their design and construction, and in the configuration placed on the market by us, satisfy the safety and health requirements of the applicable EC directives. This declaration becomes invalid in case of modifications that have not been approved by us.

This declaration applies to the following components

- RPE6
- BMP150
- LA150
- SFE6
- SFE6-II
- BPE6
- DTE6
- PME6

as well as all model variants based on these, provided that they correspond to the original factory models and have not been technically modified in any way.

Applicable directives:

- 2001/95/EG
- 2011/65/EU

Applicable national standards and technical specifications:

- DIN EN 18 800
- DIN EN ISO 12 100
- DGUV Vorschrift 17 und 18
- EN 50581: 2013-02

Berlin, Germany, January 1st, 2021

Bernhard Wüstner

6. Disposal

If you have any question regarding the disposal of used devices, please contact us under the following telephone number:

+49 (0) 71 41 - 48 89 89 0

In countries outside of the European Union, comply with local regulations.

TW AUDiO INTERNATIONAL GmbH
Osterholzallee 140-2
71636 Ludwigsburg (Germany)

Phone: + 49 (0) 71 41-48 89 89 0
Fax: + 49 (0) 71 41-48 89 89 99
E-Mail: info@twaudio.de
WWW: www.twaudio.de