PROLiGHTS

SunBlast FLX

USER MANUAL

Rev. 09/Jul/26

English version

Thank you for choosing PROLIGHTS

Please note that every PROLIGHTS product has been designed in Italy to meet quality and performance requirements for professionals and designed and manufactured for the use and application as shown in this document.

Any other use, if not expressly indicated, could compromise the good condition/operation of the product and/or be a source of danger.
This product is meant for professional use. Therefore, commercial use of this equipment is subject to the respectively applicable national accident prevention rules and regulations.

Features, specifications and appearance are subject to change without notice. Music & Lights S.r.l. and all affiliated companies disclaim liability for any injury, damage, direct or indirect loss, consequential or economic loss or any other loss occasioned by the use of, inability to use or reliance on the information contained in this document.

Product user manual can be downloaded from the website www.prolights.it , or can be inquired to the official PROLIGHTS distributors of your territory (***https://www.prolights.it/sales_network.html***).

Scanning the below **QR Code**, you will access the download area of the product page, where you can find a broad set of always updated technical documentation: specifications, user manual, technical drawings, photometrics, personalities, fixture firmware updates.

Visit the download area of the product page

The PROLIGHTS Logo, PROLIGHTS names and all other trademark in this document pertaining to PROLIGHTS services or PROLIGHTS product are trademarks OWNED or licensed by Music & Lights S.r.l., its affiliates, and subsidiaries. PROLIGHTS is a registered trademark by Music & Lights S.r.l. All right reserved. Music & Lights – Via A. Olivetti, snc - 04026 - Minturno (LT) ITALY.

INDEX

SAFETY INFORMATION **02**

1 PRODUCT OVERVIEW **05**

1.1 PACKAGE CONTENT 05
1.2 TECHNICAL DRAWING 05
1.3 HARDWARE OVERVIEW 06
1.4 MOUNTING 07
1.5 CONNECTION TO THE MAINS SUPPLY 08

2 CONNECTIONS AND CONTROL PROTOCOLS **09**

2.1 DMX CONNECTION 09
2.2 WIRELESS DMX (OPTIONAL) 10
2.3 ETHERNET CONNECTION 12
2.4 SYNCHRONIZATION 13
2.5 CONNECTION OF THE DMX LINE 14

3 CONTROL PANEL **15**

3.1 DISPLAY AND BUTTONS LAYOUT 15
3.2 SHORTCUT 15

4 MENU STRUCTURE **16**

4.1 DIMMER CURVES 24
4.3 DIMMER SPEEDS 25
4.2 FAN MODE 25

5 DMX CHARTS **27**

5.1 DMX BASIC MODES 27
5.2 DMX ADVANCED MODES 28
5.3 CHANNEL DEFINITION 30
5.4 STROBE VS. STROBE RATE / STROBE DURATION 31
5.5 PIXEL DEFINITION - RGBW PLATES 39
5.6 PIXEL DEFINITION - WHITE BEAM 39

6 RDM FUNCTIONS **40**

7 ERROR MESSAGES **42**

8 ACCESSORIES INSTALLATION **43**

8.1 CLUSTER CONFIGURATION 51
8.2 MAXIMUM LOADING UNITS 53

9 MAINTENANCE **55**

9.1 MAINTENANCE AND CLEANING THE PRODUCT 55
9.2 VISUAL CHECK OF PRODUCT HOUSING 55
9.3 TROUBLESHOOTING 56
9.4 IP65 RATING TEST 57

SAFETY INFORMATION

WARNING!

- See https://www.prolights.it/product/SUNBLASTFLX#download for installation instructions.
- Please read carefully the instruction reported in this section before installing, powering, operating or servicing the product and observe the indications also for its future handling.

This unit is not for household and residential use, only professional applications.

Connection to mains supply

- The Connection to the mains supply must be carried out by a qualified electrical installer.
- Use only AC supplies 100-240V 50-60 Hz, the fixture must be electrically connected to ground (earth).
- Select the cable cross section in according with the maximum current draw of the product and the possible number of products connected at the same power line.
- The AC mains power distribution circuit must be equipped with magnetic+residual current circuit breaker protection.
- Do not connect it to a dimmer system; doing so may damage the product.
- The product has XLR sockets for DMX input and output.
- Connection of the control signal: DMX LINE.
- Notice: this control circuit is not isolated.
- Cumulative leakage current of less than 3.5mA on the control circuit.

Protection and Warning against electrical shock

- Do not remove any cover from the product, always disconnect the product from AC power before servicing.
- Ensure that the fixture is electrically connected to ground (earth). And use only a source of AC power that complies with local building and electrical codes and has both overload and ground-fault (earth-fault) protection.
- Before using the fixture, check that all power distribution equipment and cables are in perfect condition and rated for the current requirements of all connected devices.
- Isolate the fixture from power immediately if the power plug or any seal, cover, cable, or other components are damaged, defective, deformed or showing signs of overheating.
- Do not reapply power until repairs have been completed.
- Refer any service operation not described in this manual to PROLIGHTS Service team or an authorized PROLIGHTS service center.

Installation

- Make sure that all visible parts of the product are in good visible condition before its use or installation.
- Make sure the point of anchorage is stable before positioning the projector.
- When suspending the fixture above ground level, secure it against failure of primary attachments by attaching a safety cable that is approved as a safety attachment for the weight of the fixture to the attachment point on the main frame of the product. In case the safety cable, enter in action, it needs to be replaced with a new one.
- Install the product only in well ventilated places.
- For non temporary installations, ensure that the fixture is securely fastened to a load-bearing surface with suitable corrosionresistant hardware.
- For a temporary installation with clamps, ensure that the quarter-turn fastener and/or screws are turned fully, and secured with a suitable safety cable.

0,5 m

Minimum distance of illuminated objects

- The projector needs to be positioned so that the objects hit by the beam of light are at least 0.5 meters (1.64 ft) from the lens of the projector.

T_a45°C

Max operating ambient temperature (Ta)

- Do not operate the fixture if the ambient temperature (Ta) exceeds 45 °C (113 °F).

T_a-20°C

Minimum operating ambient temperature (Ta)

- Do not operate the fixture if the ambient temperature (Ta) is below -20 °C (-4 °F).

Protection from burns and fire

- The exterior of the fixture becomes hot during use. Avoid contact by persons and materials.
- Ensure that there is free and unobstructed airflow around the fixture.
- Keep flammable materials well away from the fixture
- Do not expose the front glass to sunlight or any other strong light source from any angle. Lenses can focus the sun's rays inside the fixture, creating a potential fire hazard.
- Do not attempt to bypass thermostatic switches or fuses.

IP65

Permanent Outdoor use

- This product is rated with an IP (Ingress protection) for permanent outdoor use when used and serviced according to the instruction contained in this document.
- Never use the fixture in places subject to vibrations or bumps.
- Make certain that no inflammable liquids, water or metal objects enter the fixture.
- Excessive dust, smoke fluid, and particle build up degrades performance, causes overheating and will damage the fixture.
- Damages caused by inadequate cleaning or maintenance are not covered by the product warranty.

T_c70°C

Temperature of the external surface

- The surface of the fixture can reach up to 70 °C (158 °F) during operation. Avoid contact with people and materials.

Maintenance

- Warning! Disconnect the fixture from AC mains power and allow to cool for at least 10 minutes before handling.
- Only technicians who are authorized by PROLIGHTS or Authorised service partners are permitted to open the fixture.
- Users may carry out external cleaning, following the warnings and instructions provided, but any service operation not described in this manual must be referred to a qualified service technician.
- Important! Excessive dust, smoke fluid, and particle build up degrades performance, causes overheating and will damage the fixture. Damages caused by inadequate cleaning or maintenance is not covered by the product warranty.

Photobiological safety

- This device emits potentially dangerous optical radiation and is identified in the category of Risk Group 2 according to EN 62471.

Do not stare at the operating light source

- Do not look directly at the LED source during operation. It can be harmful to the eyes and skin.
- During Installation, operation and maintenance, be prepared for the fixture to light and move suddenly when connected to power.
- The device should be positioned so that prolonged staring into the luminaire at adistance closer than 5,9 m (19,35 ft) is not expected.

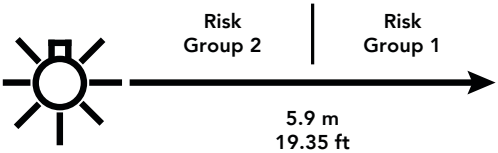

Disposal

- This product is supplied in compliance with European Directive 2012/19/EU – Waste Electrical and Electronic Equipment (WEEE). To preserve the environment please dispose/ recycle this product at the end of its life according to the local regulation.

The products to which this manual refers comply with:

- 2014/35/EU - Safety of electrical equipment supplied at low voltage (LVD).
- 2014/30/EU - Electromagnetic Compatibility (EMC).
- 2011/65/EU - Restriction of the use of certain hazardous substances (RoHS).

The products to which this manual refers comply with:

- UL 1573 + CSA C22.2 No. 166 - Stage and Studio Luminaires and Connector Strips.
- UL 1012 + CSA C22.2 No. 107.1 - Standard for power units other than class 2.

FCC Compliance:

- This device complies with Part 15 of the FCC Rules. Operation is subject to the following two conditions:

1. This device may not cause harmful interference, and
2. This device must accept any interference received, including interference that may cause undesired operation.

Other approvals

- The product meets the safety requirements of the certification procedures of the market in which it is placed and sold.

1 PRODUCT OVERVIEW

1.1 PACKAGE CONTENT

- 1x SUNBLASTFLX;
- 1x OS25PLUS;
- 1x SBLFLXB01H;
- 1x 1,5 meters power cable (BARE END - 32A NEUTRIK POWERCON TRUE1 IP65);
- User Manual.

OPTIONAL ACCESSORIES

Check the updated accessories list, description and informations of the product at the following link:
https://www.prolights.it/product/SUNBLASTFLX#accessories

1.2 TECHNICAL DRAWING

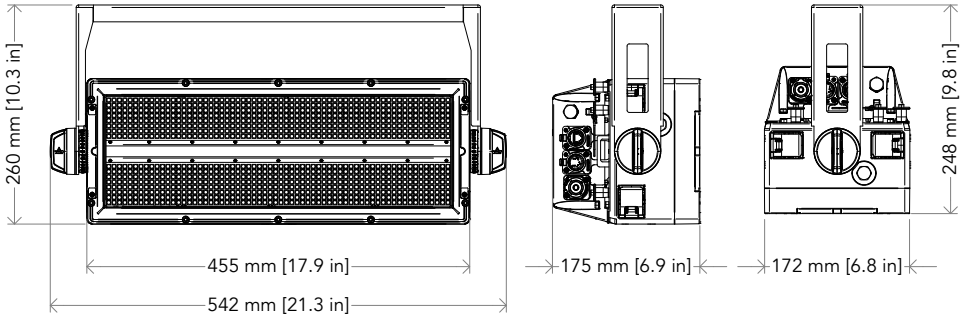

Weight: 11,6 kg - 25,57 lbs

Fig. 01

1.3 HARDWARE OVERVIEW

1. POWER IN: for connection to the Mains 100-240V~/50-60Hz.
2. DMX IN (5-p XLR): 1 = GND, 2 = sign-, 3 = sign+, 4 N/C, 5 N/C.
3. ETHERCON CONNECTORS IN / OUT signal.
4. ANTENNA of Wireless DMX Receiver internal module.
5. POWER OUT: power output for connection of multiple units in series.
6. DMX OUT (5-p XLR): 1 = GND, 2 = sign-, 3 = sign+, 4 N/C, 5 N/C.
7. GORE VALVE.
8. MALE / FEMALE MECHANICS: for matrix mounting of multiple units.
9. SECURITY PINS: for lock and unlock the mechanics.
10. SAFETY HOLE: for safety cable insertion.
11. USER INTERFACE with display and buttons for access to the control panel functions.
12. SBLFLXB01H: Included tiltable bracket for installations.
13. FRONTAL ACCESSORIES LOCK SYSTEM: to insert frontal accessories.
14. RGBW PLATE 1
15. RGBW PLATE 2
16. BEAM PLATE

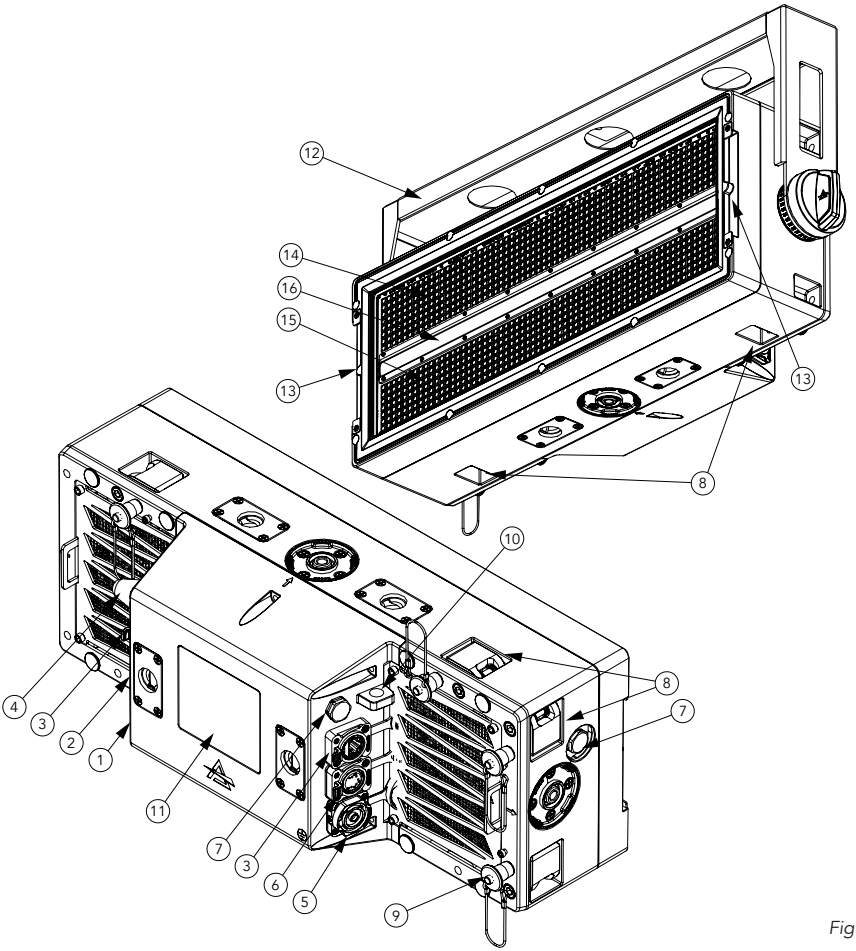

Fig. 03

1.4 MOUNTING

Ensure the supporting structure can safely bear the combined weight of all installed fixtures, clamps, cables, auxiliary equipment, etc., and complies with local regulations.
When suspending the fixture above ground level, secure it with a safety wire rated for the fixture's weight, attaching it to an anchor point on the main frame. Do not use removable parts or weak anchors for secondary attachment.
Warning: When clamping the fixture to a truss or other structure at any angle, use half-coupler clamps only. Do not use clamps that do not fully encircle the structure when fastened.

NOTE: *for further installations, please check page 45 for all the optional accessories instructions.*

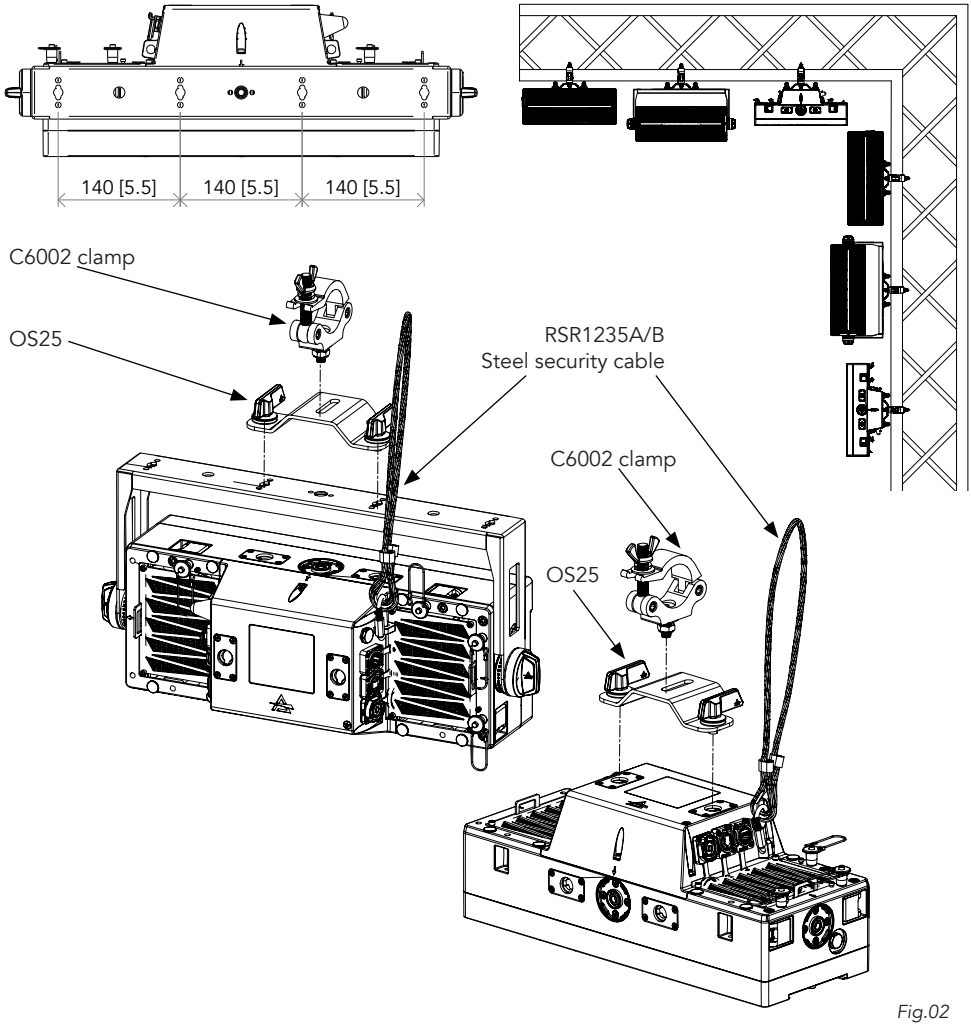

Fig.02

1.5 CONNECTION TO THE MAINS SUPPLY

WARNING: For protection from electric shock, the fixture must be earthed!
The product is equipped with auto-switching power supply that automatically adjusts to any 50-60Hz AC power source from 100-240 Volts.
If you need to install a power plug on the power cable to allow connection to power outlets, install a grounding-type (earthed) plug, following the plug manufacturer's instructions. If you have any doubts about proper installation, consult a qualified electrician.
The max power consumption is: 1200W (strobe), 400W (static).

Core (EU)	Core (US)	Connection	Plug terminal marking
Brown	Black	Live	L
Blue	White	Neutral	N
Yellow+green	Green	Earth	⏚

START UP

Connecting power

- Make sure the fixture is securely installed as described in the **Safety Information** section.
- Check that no one is exposed to risk when the fixture powers on.
- Insert the power connector into the mains input socket (**100–240V AC, 50/60Hz**).
- The fixture is now ready for use and can be controlled via the available input signals.

Disconnecting power

- To switch the fixture off, unplug the mains connector from the socket.
- To disconnect power from the product, disconnect the Mains from the socket.To disconnect power from the product, disconnect the Mains from the socket.

2 CONNECTIONS AND CONTROL PROTOCOLS

2.1 DMX CONNECTION

This fixture provides XLR connectors for DMX input and output. Use only RS-485 compliant, shielded, twisted-pair DMX cable. Standard microphone cable is not suitable for long data runs. 24-AWG DMX cable is reliable up to approx. 300 m (1000 ft).

DMX - INPUT
XLR plug

Pin1 : GND - Shield
Pin2 : - Signal
Pin3 : + Signal
Pin4 : N/C
Pin5 : N/C

DMX - OUTPUT
XLR socket

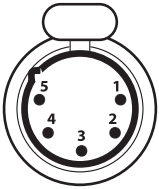

Fig. 04

DAISY CHAIN CONNECTION - RELIABLE DMX LINK

- Use 120 Ω impedance, low-capacitance DMX cable.
- Daisy-chain devices: DMX OUT > DMX IN of the next device (no star wiring without active splitters).
- Do not overload the bus: up to 32 devices per DMX segment without repeaters is standard practice for RS-485.
- To branch the line, use DMX splitter-amplifiers (one terminator per branch end).

CONSTRUCTION OF THE DMX TERMINATION

Always terminate the last device on each DMX run with a 120 Ω resistor between pins 2 and 3 (Data – and Data +). Use a DMX termination plug on the last device of the link.

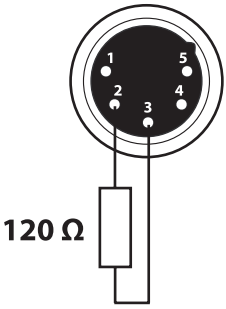

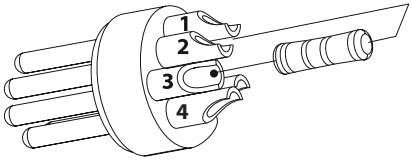

Example:
5 pin XLR connector

Fig. 06

DMX ADDRESSING

To control this fixture via DMX, assign a start address (1–512). Devices with the same address behave identically; use unique addresses to control fixtures individually. The number of channels depends on the selected DMX Mode, so check the MENU before addressing.

Set the DMX address

1. Press MENU.
2. Open the Addressing menu and select DMX ADDRESS.
3. Choose 1–512 with the navigation keys and press ENTER.
4. Press MENU to return to Home.

2.2 WIRELESS DMX (OPTIONAL)

SUNBLASTFLX supports wireless DMX communication through the integrated CRMX module. The fixture can operate either as a transmitter (TX) or a receiver (RX), with access to a full set of features including linking, protocol selection, and data routing.

RX MODE			LINK STATUS	TX MODE	
SIGNAL QUALITY	DMX PRESENCE	ICON		DMX PRESENCE	ICON
N/A	N/A		NOT LINKED / OFF	-	
N/A	N/A		LINKING / READY TO PAIR	N/A	
< 25%	Yes		LINKED	Yes	
25% to 50%	Yes		LINKED	-	
50% to 75%	Yes		LINKED	-	
> 75%	Yes		LINKED	-	
< 25%	No		LINKED	No	
25% to 50%	No		LINKED	-	
50% to 75%	No		LINKED	-	
> 75%	No		LINKED	-	

OPERATION AS A WIRELESS TRANSMITTER (TX MODE)

SUNBLASTFLX can transmit DMX wirelessly to compatible CRMX receivers

5. Enter the **CONNECT** menu, navigate to **WIRELESS** and press **ENTER**.
6. Set **CRMX ON/OFF to ON** and **CRMX MODE to TX** (Transmitter).
7. To initiate linking, set **TX LINK to ON** (available only in TX mode).

The fixture will scan for unlinked receivers for ~5 seconds and attempt connection. Ensure receivers are not already linked. If the connection fails, check the position of the receiver.

TX UNLINK

To disconnect all receivers linked to SUNBLASTFLX:

1. Enter the **CONNECT** menu, navigate to **WIRELESS** and press **ENTER**.
2. Set **TX UNLINK to ON**.

TX PROTOCOL SELECTION

To change the CRMX transmission protocol (G3, G4S, CRMX):
1. Perform **TX UNLINK** on the device and an **RX RESET** on the receiver.
2. Select the desired protocol in CRMX MODE (G3, G4S, CRMX).
3. Execute **TX LINK** again.

IN TO CRMX (TX ONLY)

Allows the fixture to transmit any incoming signal (DMX, Art-Net, or sACN) via wireless.
- If SUNBLASTFLX receives Art-Net/sACN, these take priority over DMX.
- Do not use IN TO CRMX and ETH TO DMX simultaneously to avoid data conflicts.

OPERATION AS A WIRELESS RECEIVER (RX MODE)

SUNBLASTFLX can receive a wireless DMX signal from a CRMX transmitter.
1. Enter the **CONNECT** menu.
2. Navigate to **WIRELESS** and press ENTER.
3. Set **CRMX ON/OFF to ON**.
4. Set **CRMX MODE to RX** (Receiver).
5. Set **RX RESET to ON** to clear previous links.

Then, from the transmitter, execute **TX LINK**.
Once linked:
- The display will show the DMX address if signal is present.
- It will show "No Signal" if no DMX input is detected, but the link remains active.

CRMX TO DMX (RX ONLY)

Allows retransmission of the received wireless DMX signal to the physical DMX output port of the receiver.

LINKING KEY & UNIVERSE CONFIGURATION

The CRMX system allows secure pairing and logical organization of wireless DMX communication through the use of Linking Keys, Universes, and optional Metadata.

RX MODE (RECEIVER)

When SUNBLASTFLX is set to RX mode, the following options are available:
- **Linking Key**: An 8-digit numeric code that uniquely identifies the transmitter. The receiver will only connect to transmitters using the same key, ensuring secure and intentional linking.
- **Linking Universe**: Defines the receiver's wireless universe. Universes are labeled A to H, with extended universe options (B, D, F, H) available only on devices with CRMX2 hardware.

TX MODE (TRANSMITTER)

In addition to the options above, when SUNBLASTFLX is configured as a CRMX transmitter, it also provides access to:
- **Universe Metadata**: Allows assigning a name and a color tag to the universe. This visual indicator is shown on the display of connected receivers, helping users quickly identify which transmitter a fixture is linked to.

2.3 ETHERNET CONNECTION

The product features two 8-pin RJ-45 ports (Ethernet IN/OUT) for network control via Art-Net or sACN. Use Category 5 (or better) twisted-pair cables with standard RJ-45 connectors.

1. TD+
2. TD-
3. RX+
4. Not connected
5. Not connected
6. RX-
7. Not connected
8. Not connected

RJ45 socket (front view)

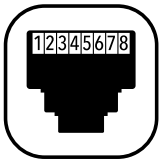

RJ45 plug (front view)

CABLING

- Use straight-through (1:1) patch cables when connecting through a hub/switch or between fixtures.
- If you connect directly from a computer to a fixture without a switch, use a crossover cable.
- The fixture includes an Ethernet pass-through switch that preserves network connectivity even when the fixture is unpowered.

DAISY-CHAIN OVER ETHERNET (IN-OUT)

- For Ethernet IN–OUT daisy-chain, connect **up to 10 fixtures per line**. For more than 10, use an Ethernet switch and a star topology.
- **Technical note**: the practical limit depends on total Layer-2 hops (each IN–OUT pass-through behaves like a 2-port switch). Keep the path from controller to the last fixture to ≤ 7 hops.
- With **sACN multicast**, use switches with **IGMP snooping** and keep daisy-chains short.

NOTE	In a daisy-chain, the first SUNBLASTFLX defines which port is used as input and which as output, then sends this configuration to the following devices. For this reason, **always use the same input port on every fixture in the chain**. If a port is reversed on a fixture in the middle of the line, the configuration will not be detected correctly and that panel will not receive any signal.

NETWORK CONFIGURATION (ON FIXTURE MENU)

- **Protocol**: select Art-Net or sACN.
- **IP addressing**: recommended ranges 002.xxx.xxx.xxx or 010.xxx.xxx.xxx.
- **Subnet mask**: 255.0.0.0.
- Set Universe (DMX frame of 512 channels) and Start Channel as required. See MENU STRUCTURE for paths (Protocol, Net, Subnet, Universe, Start Channel, IP Address, Ethernet to DMX).

ARTNET SETUP

We warmly suggest **avoiding Broadcast** transmission mode for any use, as this is usually the cause that may lead to unwanted lags and freezings, especially when using Pixel Engine due to the high amount of data.
Unicast is the transmission mode we'd recommend for any use with this protocol, as packets will be listened only from the specified receivers, not overflowing the whole network.
Keep in mind that by using Unicast with ArtNet, you'll need to set an individual IP Address for every fixture in the network. To avoid this workflow, you can alternatively choose to use sACN Multicast.

SACN SETUP

In order to establish a proper sACN Multicast environment, between SUNBLASTFLX (receiver) and the console or software (sender), there must be a switch that is IGMP capable.
In this way, all the traffic (from the sender) will be automatically directed to the specific receivers by the switch (using IGMPv2 protocol), avoiding the overflow of Ethernet ports with unwanted data, freezing or lags.
If you are sure that there are no conflicting IP Addresses in your SUNBLASTFLX network configuration, you can directly set only the Universes, as the switch will manage all the traffic automatically giving them a Multicast IP Address.

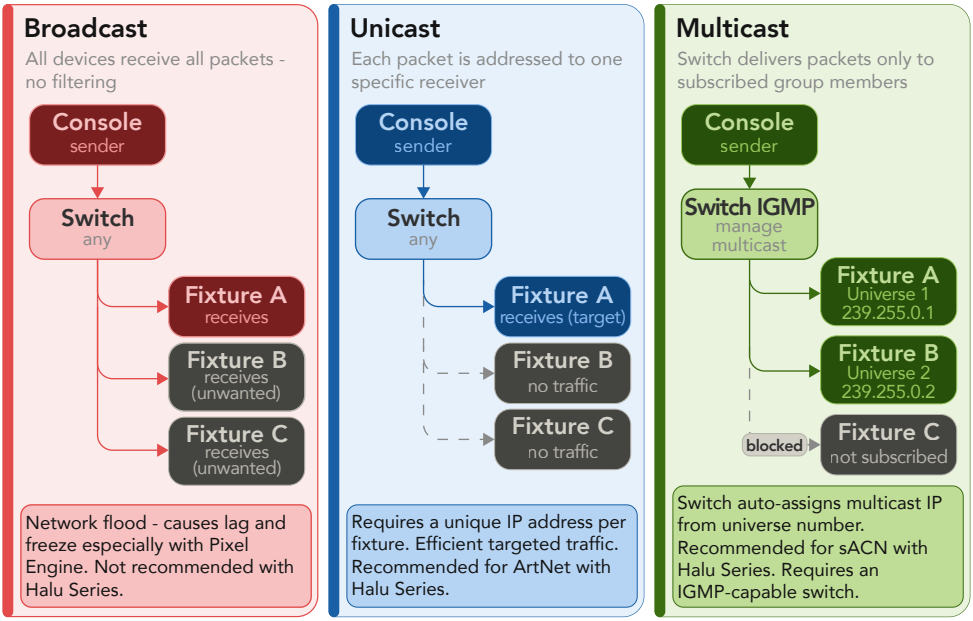

2.4 SYNCHRONIZATION

The SUNBLASTFLX supports both ArtSync packets and the sACN Sync universe.
It currently listens to **sACN universe 8024 (multicast IP 239.255.31.88) for sACN Sync**.

We'd strongly recommend setting up a "Sync capable" network infrastructure when dealing with SUNBLASTFLX's most demanding modes in terms of channels. This means that also the sender (console or software) needs to correctly output ArtSync or sACN Sync.

Below you can find some examples of the supported protocols and sync capabilities for the most common Pixel Mapping software with the proper settings for sACN / ArtNet and sACN Sync / ArtSync we suggest using with SUNBLASTFLX.

	sACN	ArtNet	sACN Sync	ArtSync
MadMapper	Multicast	Unicast	Supported	Supported
MADRIX 5	Multicast	Unicast	Not Documented	Supported
Resolume Arena	No	Unicast	Not Documented	Supported
TouchDesigner	Multicast	Unicast	Not Documented	Supported
Pharos 2.8	Multicast	Unicast	Supported	Supported
Disguise	Multicast	Unicast	Supported	Not Documented
Hippotizer	Multicast	Unicast	Supported	Not Documented

Update 04/2026

Below you can find some examples of the supported protocols and sync capabilities for the most common lighting desks with the proper settings for sACN / ArtNet we suggest using with SUNBLASTFLX.

	sACN	ArtNet	sACN Sync	ArtSync
GrandMA3	Multicast	Unicast	Not Documented	Not Documented
ChamSys	Multicast	Unicast	Supported	Supported
Avolites	Multicast	Unicast	Supported	Not Documented
Hog 4	Multicast	Unicast	Not Documented	Not Documented
ETC EOS	Multicast	Unicast	Not Documented	Not Documented
Vista	Multicast	Unicast	Not Documented	Not Documented
Onyx	Multicast	Unicast	Supported	Supported

Update 04/2026.

2.5 CONNECTION OF THE DMX LINE

DMX connection employs standard XLR connectors. Use shielded pair-twisted cables with 120Ω impedance and low capacity.
The following diagram shows the connection mode:

3 CONTROL PANEL

The product has a display, buttons and pushable encoders for access to the control panel functions.

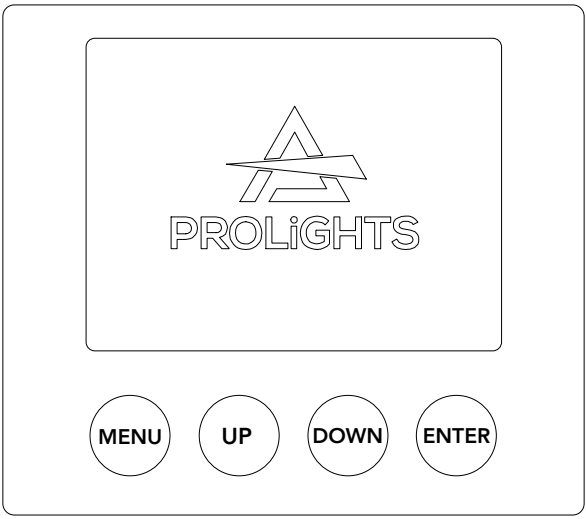

Fig. 07

3.1 DISPLAY AND BUTTONS LAYOUT

The product has a display and buttons for access to the control panel functions:

MENU	• Used to access the menu tree and to return to the upper level. Hold to go back to the home screen.
UP	• Browse upwards through the menu list and increases the numeric value displayed.
DOWN	• Browse downwards through the menu list and decreases the numeric value displayed.
ENTER	• Used to confirm the displayed value, or activate the displayed function.

3.2 SHORTCUT

Keys	Mode	Description
"UP + DOWN after power on"	Flip Display	Directly flip display without enter inside menu
ENTER (3 sec)	Standalone Mode	Direct access to Standalone menu (when no DMX signal)
"MENU + UP then power on"	Factory Reload	Factory Default

4 MENU STRUCTURE

The following chart describes the MENU tree of the product, the terms shown in **BOLD** indicate the default settings. Functionalities with the "(WIP)" description are still under development.
NOTE: *The terms marked with "*" will be available soon.*

MENU: CONNECT

LEVEL 1	LEVEL 2	LEVEL 3	LEVEL 4	LEVEL 5	DESCRIPTION
DMX ADDRESS	MAIN	**DMX**	1-512		*Set DMX Address for Main fixture*
		ARTNET			
		SACN			
	RGBW PIXELS	**FOLLOW FIXTURE**	1-512		*Set DMX Address for Pixel Engine*
		DMX			
		ARTNET			
		sACN			
		sACN+ARTNET			
DMX MODE	STROBE				
	BASIC				
	STANDARD 1	WHITE BEAM: **SINGLE** 12 PIX	RGBW PIXELS: **OFF** 4 PIX 8 PIX 16 PIX		*Configures the main DMX mode of the fixture. After selecting the main mode, it is possible to enable pixel-to-pixel control for the BEAM LEDs, which will be appended to the main mode. Additionally, pixel-to-pixel control for PIXEL LEDs can be enabled, requiring these sources to be patched separately as a pixel engine.*
	STANDARD 2				
	FX 1				
	FX 2				
	EXTENDED 1				
	EXTENDED 2				
	PIXELS ONLY	WHITE BEAM: OFF **12 PIX**	RGBW PIXELS: OFF 4 PIX **8 PIX** 16 PIX		*Enables the fixture to be used with pixel control only. User can choose how many pixels for plate and beam*
WIRELESS	CRMX ON/OFF	ON			*Enable the wireless card.*
		OFF			
	CRMX MODE	TX CRMX			*Allows configuration of the wireless card as either a Transmitter or Receiver. G4s and G3 are supported protocols for connection with Wireless Solution products.*
		TX G4S			
		TX G3			
		RX			
	TX LINK	ON			*Enables the transmission link when the unit is set as a Transmitter.*
		OFF			
	TX UNLINK	ON			*Disconnects the transmitter from all connected receivers. TX Unlink can only be used when the unit is in Transmitter mode in CRMX settings.*
		OFF			
	RX RESET	ON			*Disconnects the CRMX card, set as a Receiver, from any connected transmitters.*
		OFF			
	IN TO CRMX (TX)	**ON**			*Enable/Disable the transmission of the DMX from the transmitter to the receiver via CRMX*
		OFF			

MENU: CONNECT

LEVEL 1	LEVEL 2	LEVEL 3	LEVEL 4	LEVEL 5	DESCRIPTION
WIRELESS	CRMX TO DMX (RX)	**ON**			*Enable/Disable the retransmission of the DMX from the receiver to the other units connected by cable to the receiver itself*
		OFF			
	LINKING KEY	ON	SET LINKING KEY	8 digit code	*RX MODE: Linking key section available only in RX mode.* *TX MODE: When in TX mode, message on screen: "Linking Key available only in RX Mode"*
		OFF			
	UNIVERSE METADATA	UNIVERSE NAME	xxx		*RX Mode: received from TX;* *TX CRMX Mode: default first 16 characters of Model Name:* *(DEVICELABEL-Last 4 digit of RDM UID)*
		UNIVERSE COLOR	RED		*Universe Color can be set only if CRMX Mode@TX;* *If CRMX Mode@RX, Universe Color shows the one set on the TX*
			FIRE		
			YELLOW		
			GREEN		
			EMERALD		
			OCEAN		
			BLUE		
			DEEP PURPLE		
			COOL WHITE		
	LINK STRENGTH	** %			*Show Wireless quality by percentage*
	CRMX SOFTWARE VERSION	TimoFX: Vx.x.xx			*Show firmware version of TimoFX module*
ETHERNET SETTINGS	ARTNET SETTINGS	FIXTURE	IP ADDRESS	xxx.xxx.xxx.x	*Set IP Address for ArtNet usage.*
			SUBNET MASK	255.xxx.xxx.x	*Set SubNet Mask for ArtNet usage.*
			NET	0-127	*Set Net used for ArtNet*
			SUBNET	0-15	*Set SubNet used for ArtNet*
			UNIVERSE	0-15	*Set Universe used for ArtNet*
			ABS. UNIVERSE	0-32767	*Set Absolute Universe*
		PIXELS	IP ADDRESS	xxx.xxx.xxx.x	*Set IP Address for ArtNet usage.*
			SUBNET MASK	255.xxx.xxx.x	*Set SubNet Mask for ArtNet usage.*
			NET	0-127	*Set Net used for ArtNet*
			SUBNET	0-15	*Set SubNet used for ArtNet*
			UNIVERSE	0-15	*Set Universe used for ArtNet*
			ABS. UNIVERSE	0-32767	*Set Absolute Universe*
	sACN SETTINGS	FIXTURE	IP ADDRESS	xxx.xxx.xxx.x	*Set IP Address for ArtNet usage.*
			UNIVERSE	1-63999	
			SUBNET MASK	255.xxx.xxx.x	
			MERGE MODE	HTP	*Toggle and Set Merge mode for sACN.*
				LTP	

MENU: CONNECT

LEVEL 1	LEVEL 2	LEVEL 3	LEVEL 4	LEVEL 5	DESCRIPTION
ETHERNET SETTINGS		PIXELS	IP ADDRESS	xxx.xxx.xxx.x	*Set IP Address for ArtNet usage.*
			UNIVERSE	1-63999	
			SUBNET MASK	255.xxx.xxx.x	
			MERGE MODE	HTP	*Toggle and Set Merge mode for sACN.*
				LTP	
	ETHERNET TO CRMX	**ON**			*Enables retransmission of the Ethernet signal over CRMX.*
		OFF			
	ETHERNET TO DMX	**ON**			*Enables retransmission of the Ethernet signal over a standard DMX cable. A slight time delay may occur on the DMX line.*
		OFF			

MENU: SETUP

LEVEL 1	LEVEL 2	LEVEL 3	LEVEL 4	LEVEL 5	DESCRIPTION
SCREEN	BACKLIGHT	ALWAYS ON			*Sets the time after which the display will automatically turn off when inactive.*
		10S			
		20S			
		30S			
	FLIP DISPLAY	ON			*Enables the display to be rotated by 180°.*
		OFF			
	KEY LOCK	ON			*Lock the buttons on the control panel with a password. To access the user menu, enter the following button sequence (password): UP, DOWN, UP, DOWN, ENTER.*
		OFF			
	DISPLAY VALUE	RAW DATA			*Choose how to show datas on Stand Alone Modes:* *In percentage mode values will be shown as 0-100%.* *In Raw Data mode values will be shown as 0-255.*
		PERCENTAGE			
	TEMP. UNIT	**°C**			
		°F			
DIMMER	DIMMER CURVE	PIXELS	LINEAR		*Check pag.23 for further details*
			S-CURVE		
			SQUARE LAW		
			INVERSE SQUARE LAW		
			HIGH RES@LOW		
		BEAM	LINEAR		
			S-CURVE		
			SQUARE LAW		
			INVERSE SQUARE LAW		
			HIGH RES@LOW		

MENU: SETUP

LEVEL 1	LEVEL 2	LEVEL 3	LEVEL 4	LEVEL 5	DESCRIPTION
DIMMER	DIMMER SPEED	PIXELS	**AUTO**		*Check pag.23 for further details*
			FAST		
			MEDIUM		
			SLOW		
			OFF		
		BEAM	**AUTO**		
			FAST		
			MEDIUM		
			SLOW		
			OFF		
	DIMMER END	**FADE OFF@END**			*Defines how the light turns off: FADE OFF@END for a smooth fade-out, or SNAP OFF@END for an instant off.*
		SNAP OFF@END			
	TUNGSTEN EMULATION	ON			
		OFF			
FIXTURE	FAN MODE	**CONSTANT OUTPUT**	**AUTO**		*Check pag.25 for further details*
			HIGH		
			SILENT1		
			SILENT2		
			OFF		
		DYNAMIC OUTPUT	AUTO		
			HIGH		
			SILENT1		
			SILENT2		
			OFF		
	DMX FAULT	**HOLD**			*Defines fixture behavior on DMX signal loss: HOLD (keep last state), BLACKOUT (turn off), STAND ALONE (run internal program), or EMERGENCY (activate emergency mode with white output).*
		BLACKOUT			
		STAND ALONE			
		EMERGENCY			
	INVERT MAPPING	**OFF**			*Normal pixel mapping*
		INVERT PLATE			*Invert plate pixels only*
		INVERT BEAM			*Invert beam pixel only*
		INVERT ALL			*Invert all pixels (all fixture)*
USER SETTINGS	PRESET 1	SAVE			*Allows users to store all fixture settings, similar to a configuration file. Up to 5 presets can be saved.*
	PRESET 2				
	PRESET 3	RECALL			*Check pag.26 for further details*
	PRESET 4				
	PRESET 5	DELETE			
TRANSFER SETTING	WITHOUT DMX ADDRESS				*Transfer settings from the current fixture to another fixture of the same model using the DMX protocol. If a signal from another source is present, the Transfer Configuration function will not be available.*
	WITH DMX ADDRESS				

MENU: ADVANCED

LEVEL 1	LEVEL 2	LEVEL 3	LEVEL 4	LEVEL 5	DESCRIPTION
SPEKTRA CALIBR.	**PURE COLORS**				*Check pag.26 for further details*
	OFF				
WHITE POINT	3200K				*This setting defines the target white balance of the fixture by allowing selection of a specific white point, ranging from 3200K to 8000K, or OFF. Selecting a white point ensures a consistent white tone when all color channels are at full intensity, adjusting for any potential color cast. When set to OFF, the white may appear uncalibrated, reflecting the natural balance of the LEDs.*
	4000K				
	5600K				
	6000K				
	8000K				
	OFF				
LED FREQUENCY	1000HZ				*Select PWM frequency.* *NOTE: Using higher LED Frequency color accuracy may be slightly compromised at low level of dimmer.*
	2000HZ				
	4000HZ				
	6000HZ				
	10KHZ				
	25KHZ				
TEST	PLATE 1				*The device will perform a sequence to test the selected function.*
	PLATE 2				
	PLATE 1+2				
	BEAM				
	ALL				
FACTORY RELOAD	BASIC	**OFF**			*Default of all parameters excepted Ethernet settings*
		ON			
	STANDARD	**OFF**			*Default of all parameters excepted Calibration*
		ON			
	USER PRESET	**OFF**			*Delete all USER PRESETS stored*
		ON			

MENU: INFORMATIONS

LEVEL 1	LEVEL 2	LEVEL 3	LEVEL 4	LEVEL 5	DESCRIPTION
FIXTURE TIME	FIXTURE HOURS	TOTAL	<65535H>		*View informations about product operating lifetime.* *Fixture Hours is countered based on general operation time.* *Hours are countered since Power is plugged in.* *Source Hours is countered based on LED Activity time*
		PARTIAL	<65535H>		
	CURRENT HOURS	TOTAL	<65535H>		
		PARTIAL	<65535H>		
	SOURCE HOURS	TOTAL	<65535H>		
		PARTIAL	<65535H>		
	AC POWER ON CYCLE	TOTAL	<65535H>		
		PARTIAL	<65535H>		
	MAINTENANCE TIME	ELAPSED TIME			
		ALERT PERIOD	10 - 1000		
POWER CONS.	** W				*Show estimated power consumption*
TEMP.	LED1 xx C°				
	LED2 xx C°				
	LED3 xx C°				
FAN SPEED	FAN1 [...]				*Show all FAN speeds.*
CHANNEL VALUE					*Show all Channel values as a list, value shown depends on DMX Mode*
ERROR MESSAGE					*Show error message*
DEVICE LABEL	SUNBLASTFLX				*Show RDM Label.*
DEVICE MODEL	SUNBLASTFLX				*Show RDM fixture model*
RDM UID	15D0********				*Show RDM UID of the fixture.*
SOFTWARE VERSION	V1.0.00...				*Show firmware version of the fixture*

MENU: STAND ALONE

LEVEL 1	LEVEL 2	LEVEL 3	LEVEL 4	LEVEL 5	DESCRIPTION
MASTER/SLAVE	MASTER DMX				
	MASTER NO DMX				
	SLAVE				
TOUR FX	PLATE FX 1-xx	PATTERN SPEED			*Default value: 128*
		PATTERN FADE			*Default value: 0*
		PATTERN TRANSITION			
		F.G. INTENSITY			*Default value: 255*
		F.G. STROBE			*Default value: 255*
		F.G. RED			*Default value: 255*
		F.G. GREEN			*Default value: 0*
		F.G. BLUE			*Default value: 0*
		F.G. WARM WHITE			
		B.G. INTENSITY			*Default value: 255*
		B.G. STROBE			*Default value: 255*
		B.G. RED			*Default value: 0*
		B.G. GREEN			*Default value: 0*
		B.G. BLUE			*Default value: 255*
		B.G. WARM WHITE			*Default value: 0*
	BEAM FX 1-xx	PATTERN SPEED			*Default value: 128*
		PATTERN FADE			*Default value: 0*
		PATTERN TRANSITION			
		F.G. INTENSITY			*Default value: 255*
		F.G. STROBE			*Default value: 255*
		B.G. INTENSITY			*Default value: 255*
		B.G. STROBE			*Default value: 255*
CCT	DIMMER	0-255			*Default value: 255*
	CCT	From 2200K to 15000K (50°K jump)			
	GMP	From -0.25 to +0.25			
HSI	Hue	0-255			*Default value: 0*
	Saturation	0-255			*Default value: 0*
	Intensity	0-255			*Default value: 255*
FIXED COLORS	DIMMER	0-255			*Default value: 255*
	FIXED	R			
		G			
		B			
		W			
		RG			
		RB			
		RW			

MENU: STAND ALONE

LEVEL 1	LEVEL 2	LEVEL 3	LEVEL 4	LEVEL 5	DESCRIPTION
FIXED COLORS	FIXED	GB			
		GW			
		BW			
		RGB			
		RGW			
		RBW			
		GBW			
		RGBW			
WHITE PRESETS	DIMMER	0-255			*Default value: 255*
	CCT	2700K			
		2800K			
		3200K			
		3500K			
		4000K			
		4500K			
		5000K			
		5600K			
		6000K			
		6500K			
		7000K			
		7500K			
		8000K			
		8500K			
		9000K			
		9500K			
		10000K			
	GMP	From -0.25 to +0.25			*Default value: 0*
COLOR MACRO	DIMMER	0-255			*Default value: 255*
	COLOR				*Check Color Macro channel page 34*
MANUAL COLORS	DIMMER	0-255			*Default value: 255*
	RED	0-255			*Default value: 255*
	GREEN	0-255			*Default value: 255*
	BLUE	0-255			*Default value: 255*
	WHITE	0-255			*Default value: 255*

4.1 DIMMER CURVES

Five dimming modes are available:

1. **LINEAR** - Light intensity increases proportionally to the DMX value, creating a linear perception.
2. **S-CURVE** - Light intensity is finer at low and high levels, with coarser control at mid-levels.
3. **SQUARE LAW** - Light intensity is finer at low levels and becomes coarser at higher levels.
4. **INVERSE SQUARE LAW** - Light intensity is coarser at low levels and finer at higher levels.
5. **HIGHRES@LOW** - Provides very fine control at low light intensities, with coarser control at medium and high levels.

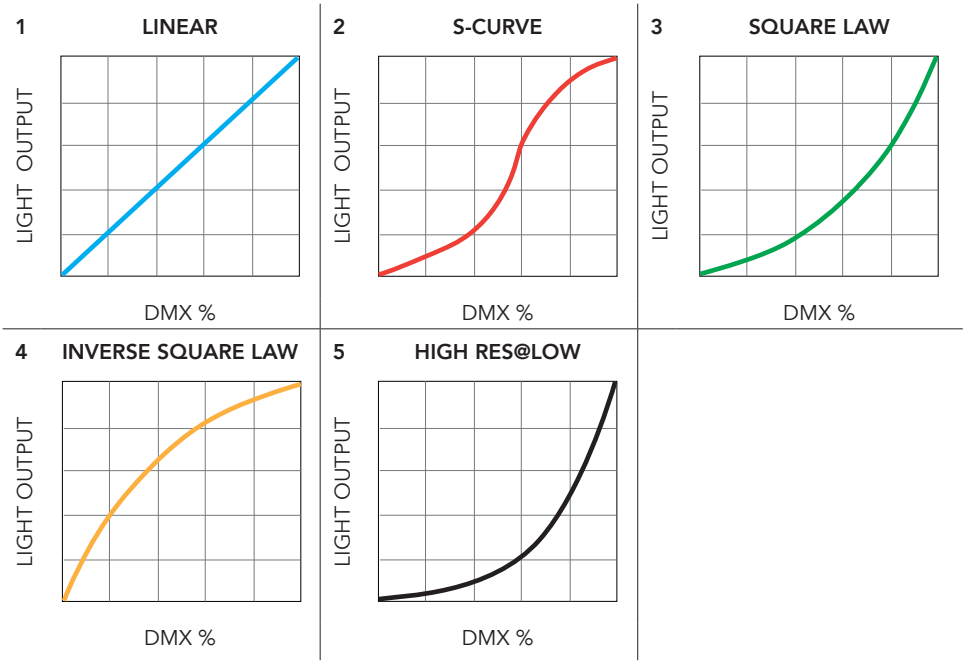

4.3 DIMMER SPEEDS

Five dimming speeds are available:

1. **AUTO** - When the DMX value changes by more than 50 DMX values, the intensity will instantly adjust to the new value. For changes less than 50 DMX values, the fast dimming curve will be applied.
2. **FAST** - Indicates the fast speed dimming curve. Refer to the diagram for reference.
3. **MEDIUM** - Indicates the medium speed dimming curve. Refer to the diagram for reference.
4. **SLOW** - Indicates the slow dimming curve. Refer to the diagram for reference.
5. **OFF** - The intensity will immediately adjust to the new value (essentially no delay effect).

DIMMER SPEED BEHAVIOUR

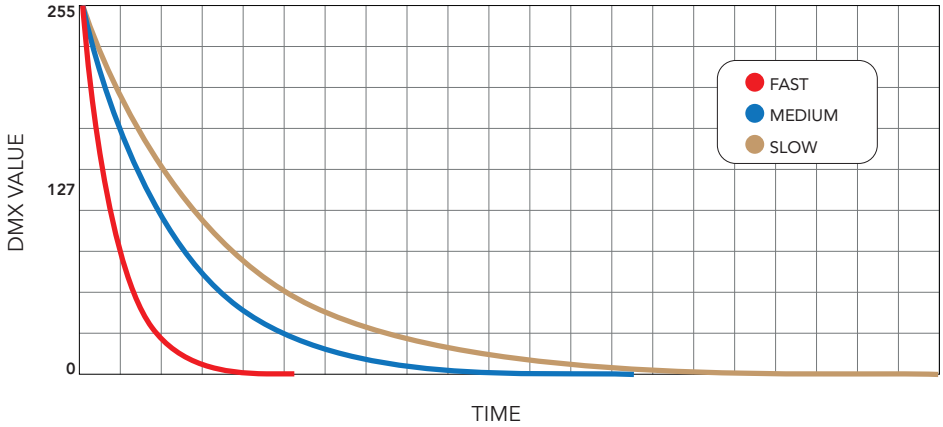

4.2 FAN MODE

MODE		MAX POWER	FAN SPEED
Constant Output	Auto	100%	Variable from 0% to 100% according to the led temperature to keep constant output.
	High	100%	Fixed Speed: 3000 RPM
	Off	10%	Fixed Speed: 0 RPM
	Silent 1	50%	Fixed Speed: 2300 RPM
	Silent 2	40%	Fixed Speed: 1600 RPM
Dynamic Output	Auto	100%	Variable from 0% to 100% according to the led temperature to keep constant output.
	High	Up to 100%	Fixed Speed: 3000 RPM
	Off	Starts from 100% Max drop -90%	Fixed Speed: 0 RPM
	Silent 1	Starts from 100% Max drop -50%	Fixed Speed: 2300 RPM
	Silent 2	Starts from 100% Max drop -60%	Fixed Speed: 1600 RPM

NOTE

Fan settings through the "Control Channel" are saved permanently on the device. They can be changed again via the "Control Channel" or through the menu;

USER SETTINGS

This function allows the fixture to store and manage custom settings, which are saved as user presets. Factory default settings will not overwrite these saved presets, preserving each user's configuration.

- **SAVE -** Available when a preset slot is empty, enabling users to save the current fixture settings into that slot. Up to five presets can be saved for quick recall of different configurations. **RECALL -** Loads the settings stored in a selected preset slot, applying them to the fixture and making it easy to switch between saved configurations as needed.
- **DELETE -** Clears the selected preset slot, freeing it up for a new save. Deleting a preset does not impact any other saved presets or factory settings.

DMX FAULT

This function defines how the fixture behaves when the DMX signal is lost. The available modes are:

- **HOLD -** The fixture keeps the last received DMX frame, freezing its current output until the signal returns.
- **BLACKOUT -** The fixture switches off, turning all output to zero until the DMX signal is restored.
- **STAND ALONE -** The fixture switches to the configured standalone mode. If no standalone mode has been set, it runs the default one.
- **EMERGENCY -** The fixture turns on in full white, acting as an emergency light until the DMX signal returns.

SPEKTRA CALIBRATION

This fixture is equipped with Spektra OS, offering advanced settings for multiple color space modes, as outlined below:

- **PURE COLOURS -** CCT is calibrated, giving perfect white matching across multiple fixtures, but primary and secondary colors are calibrated to their native color space which allows maximum color saturation. The closer you move towards white, the more closely multiple fixtures will match each other's output. The further you move away from white and the closer you move towards saturated color, the less closely multiple fixtures will match each other's output.
- **OFF -** CCT doesn't guarantee High CRI Values and color output of one fixture may or may not closely match that of other fixtures.

WHITE POINT

This function sets the target white point (CCT) the fixture aims for when all color channels (RGBW) are at full, producing a calibrated full-white output. The available values are 3200K, 4000K, 5600K, 6000K and 8000K. Selecting OFF disables the calibration and the fixture outputs the raw, uncalibrated white of its native LEDs.

MASTER/SLAVE

The MASTER/SLAVE function lets one fixture control others in a daisy-chain setup, ensuring synchronized operation. To use it, the controlling fixture must run in standalone mode and be set as MASTER. The available modes are:

- **MASTER DMX -** The fixture runs in standalone mode and transmits its standalone behaviour via DMX to the other fixtures in the daisy chain.
- **MASTER NO DMX -** The fixture works as master but does not transmit the DMX signal to the other fixtures in the daisy chain.
- **SLAVE -** The fixture stays in standby, waiting for a signal from a fixture set to MASTER DMX. If a standalone mode is selected while in SLAVE, the fixture automatically switches to MASTER NO DMX.

5 DMX CHARTS

RDM Model ID: 0xD161

RDM Personality ID List

ID	DMX Mode	Footprint
1	STROBE	7CH
2	BASIC	13CH
3	STANDARD 1	21CH
4	STANDARD 2	32CH
5	FX 1	29CH
6	FX 2	37CH
7	EXTENDED 1	47CH
8	EXTENDED 2	60CH

5.1 DMX BASIC MODES

PARAMETER	STROBE (7ch)	BASIC (13ch)
DIMMER	1	1
STROBE	2	2
STROBE DURATION	3	3
STROBE RATE	4	4
RED	-	5
GREEN	-	6
BLUE	-	7
WHITE	-	8
BEAM DIMMER	5	9
BEAM STROBE	-	10
BEAM STROBE DURATION	-	11
BEAM STROBE RATE	-	12
COLOR MACRO	6	-
CONTROL	7	13

NOTE
In these modes the Pixel engine is not allowed

5.2 DMX ADVANCED MODES

	PARAMETER	STD 1 (21ch)	STD 2 (36ch)	FX 1 (32ch)	FX 2 (42ch)	EXT.1 (47ch)	EXT.2 (60ch)
MASTER	DIMMER	-	-	-	1	1	1
	DIMMER FINE	-	-	-	2	2	2
	STROBE	-	-	-	-	3	3
	STROBE DURATION	-	-	-	-	4	4
	STROBE RATE	-	-	-	-	5	5
ALL PLATE / TOP PLATE	DIMMER	1	1	1	3	6	6
	DIMMER FINE	2	2	2	4	7	7
	STROBE	3	3	3	5	8	8
	STROBE DURATION	-	4	4	6	9	9
	STROBE RATE	-	5	5	7	10	10
	RED	4	6	6	8	11	11
	RED FINE	5	7	7	9	12	12
	GREEN	6	8	8	10	13	13
	GREEN FINE	7	9	9	11	14	14
	BLUE	8	10	10	12	15	15
	BLUE FINE	9	11	11	13	16	16
	WHITE	10	12	12	14	17	17
	WHITE FINE	11	13	13	15	18	18
BOTTOM PLATE	DIMMER	-	14	-	-	-	19
	DIMMER FINE	-	15	-	-	-	20
	STROBE	-	16	-	-	-	21
	STROBE DURATION	-	17	-	-	-	22
	STROBE RATE	-	18	-	-	-	23
	RED	-	19	-	-	-	24
	RED FINE	-	20	-	-	-	25
	GREEN	-	21	-	-	-	26
	GREEN FINE	-	22	-	-	-	27
	BLUE	-	23	-	-	-	28
	BLUE FINE	-	24	-	-	-	29
	WHITE	-	25	-	-	-	30
	WHITE FINE	-	26	-	-	-	31
BEAM	BEAM DIMMER	12	27	14	16	19	32
	BEAM DIMMER FINE	13	28	15	17	20	33
	BEAM STROBE	14	29	16	18	21	34
	BEAM STROBE DURATION	15	30	17	19	22	35
	BEAM STROBE RATE	16	31	18	20	23	36

	PARAMETER	STD 1 (21ch)	STD 2 (36ch)	FX 1 (32ch)	FX 2 (42ch)	EXT.1 (47ch)	EXT.2 (60ch)
PLATE FX	PATTERN SELECTOR	-	-	19	21	24	37
	PATTERN SPEED	-	-	20	22	25	38
	PATTERN FADE	-	-	21	23	26	39
	PATTERN TRANSITION	-	-	22	24	27	40
	PATTERN XFADE	-	-	23	25	28	41
	DIMMER	-	-	24	26	29	42
	STROBE	-	-	25	27	30	43
	RED	-	-	26	28	31	44
	GREEN	-	-	27	29	32	45
	BLUE	-	-	28	30	33	46
	WHITE	-	-	29	31	34	47
BEAM FX	FX SELECTOR	-	-	-	32	35	48
	PATTERN SPEED	-	-	-	33	36	49
	PATTERN FADE	-	-	-	34	37	50
	PATTERN TRANSITION	-	-	-	35	38	51
	PATTERN XFADE	-	-	-	36	39	52
	BEAM DIMMER	-	-	-	37	40	53
	BEAM STROBE	-	-	-	38	41	54
COLORS	COLOR MACRO	-	-	-	39	42	55
	CCT	17	32	-	-	43	56
CROSSFADE	XFADE PROTOCOL	18	33	30	40	44	57
	XFADE TO PIXEL ENGINE	19	34	31	41	45	58
	XFADE WHITE TO COLOR	20	35	-	-	46	59
	CONTROL	21	36	32	42	47	60
	BEAM PIXELS If selected, beam main dimmer works as master	If selected on the menu, +12 dimmer channels					

5.3 CHANNEL DEFINITION

DIMMER

Function	DMX		Note
	From	To	
Dimmer	0 (0)	255 (65535)	Default @ 0 (Linear Dimmer 0 - 100%)

STROBE

Function	DMX		Note
	From	To	
Open	0	4	Default @ 255
Strobe (slow to fast)	5	44	
Open	45	46	
Pulse In (slow to fast)	47	86	
Open	87	88	
Pulse Out (slow to fast)	89	128	
Close	129	130	
Random (slow to fast)	131	170	Random flash on all fixture
Open	171	172	
Random single pixels (slow to fast)	173	212	Flash on random pixels
Open	213	214	
Spikers (slow to fast)	215	254	Flash on low light
Open	255	255	

STROBE DURATION

Function	DMX		Note
	From	To	
0ms to 990ms	0	255	Default @ 0

STROBE RATE

Function	DMX		Note
	From	To	
Rate off	0	5	Default @ 0
Slow (0,3Hz) to fast (25Hz)	6	250	
Open - 100% on	251	255	

5.4 STROBE VS. STROBE RATE / STROBE DURATION

The fixture offers two ways to generate strobe effects, selected by the Strobe Rate channel:

- **Strobe Rate = 0-5 DMX (Rate Off):** the output follows the Strobe channel and behaves as a conventional strobe, from slow to fast
- **Strobe Rate > 6-255 DMX:** the Strobe Rate channel takes priority over the Strobe channel. The effect is now defined by the combination of two parameters - Strobe Rate, which sets the flash frequency and Strobe Duration, which sets how long each flash stays open (the pulse width). This allows more sophisticated and complex effects.

In short, the Strobe channel is a simple all-in-one strobe, while Strobe Rate + Strobe Duration give independent control over frequency and pulse width. As long as Strobe Rate is not 0, it overrides the Strobe channel.

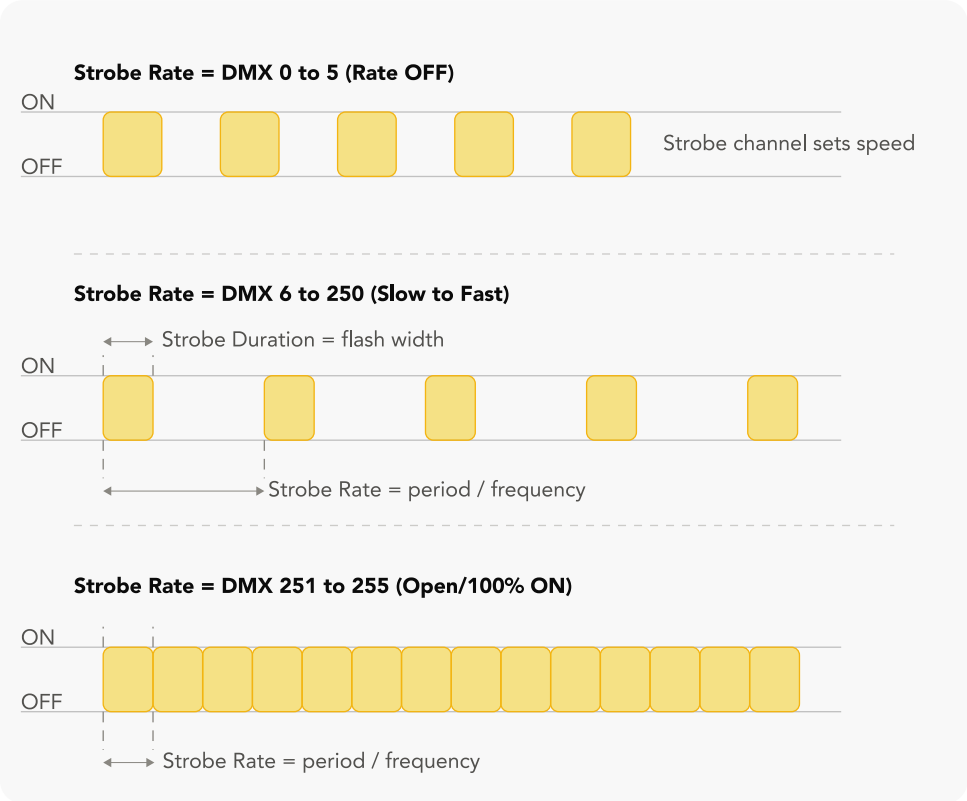

COLORS (RED - GREEN - BLUE - WHITE)

Function	DMX		Note
	From	To	
Color	0 (0)	255 (65535)	Linear 0 - 100% Default @ 255 (8bit) / 65535 (16bit)

SMART FROST

Function	DMX		Note
	From	To	
No frost	0	0	Default @ 0
Frost opacity 0 to 100%	1	254	
Full frost	255	255	

CROSSFADE FROM ETH1 TO ETH2

Function	DMX		Note
	From	To	
Linear Crossfade	0	255	Default @ 0 Crossfade from Pixel Engine running on first ETH protocol to second Pixel Engine running on second ETH protocol

CROSSFADE FROM COLOR TO PIXEL ENGINE

Function	DMX		Note
	From	To	
Linear Crossfade	0	255	Default @ 0 Crossfade from Color Layer to Pixel Engine

CROSSFADE FROM CCT TO COLORMIX

Function	DMX		Note
	From	To	
Linear Crossfade	0	255	Default @ 255 Crossfade from CCT Layer to ColorMix

CROSSFADE HIERARCHY

Following order must be read from bottom to top. First Level is CCT, Second level is Color Mix, Third level is Pixel Engine (ETH1 in case of double Protocol used), Fourth level is Pixel Engine (ETH2)	
ETH1 to ETH2	Fixture must be running a Pixel Engine using two protocols (Pixel Address -> Artnet+sAcn) Crossfade is inhibited in any other case.
Color to Pixel Engine	Fixture must be running a Pixel Engine. Pixel Engine is allocated on separated DMX Address. Crossfade is inhibited in any other case.
CCT to Color Mix	Crossfade running on Fixture Engine. Crossfades from CCT to Color Mix level. FXs and Tour FXs are running on Color Mix level.

CCT (2800K - 10000K)

Function		DMX		Note
CCT(K) From	CCT(K) To	From	To	
2800	2900	0	4	Default @ 0
2900	3000	4	7	
3000	3100	7	11	
3100	3200	11	14	
3200	3300	14	18	
3300	3400	18	21	
3400	3500	21	25	
3500	3600	25	28	
3600	3700	28	32	
3700	3800	32	35	
3800	3900	35	39	
3900	4000	39	43	
4000	4100	43	46	
4100	4200	46	50	
4200	4300	50	53	
4300	4400	53	57	
4400	4500	57	60	
4500	4600	60	64	
4600	4700	64	67	
4700	4800	67	71	
4800	4900	71	74	
4900	5000	74	78	
5000	5100	78	81	
5100	5200	81	85	
5200	5300	85	89	
5300	5400	89	92	
5400	5500	92	96	
5500	5600	96	99	
5600	5700	99	103	
5700	5800	103	106	
5800	5900	106	110	
5900	6000	110	113	
6000	6100	113	117	
6100	6200	117	120	
6200	6300	120	124	
6300	6400	124	128	
6400	6500	128	131	
6500	6600	131	135	

CCT (2800K - 10000K)

Function		DMX		Note
CCT(K) From	CCT(K) To	From	To	
6600	6700	135	138	
6700	6800	138	142	
6800	6900	142	145	
6900	7000	145	149	
7000	7100	149	152	
7100	7200	152	156	
7200	7300	156	159	
7300	7400	159	163	
7400	7500	163	166	
7500	7600	166	170	
7600	7700	170	174	
7700	7800	174	177	
7800	7900	177	181	
7900	8000	181	184	
8000	8100	184	188	
8100	8200	188	191	
8200	8300	191	195	
8300	8400	195	198	
8400	8500	198	202	
8500	8600	202	205	
8600	8700	205	209	
8700	8800	209	213	
8800	8900	213	216	
8900	9000	216	220	
9000	9100	220	223	
9100	9200	223	227	
9200	9300	227	230	
9300	9400	230	234	
9400	9500	234	237	
9500	9600	237	241	
9600	9700	241	244	
9700	9800	244	248	
9800	9900	248	251	
9900	10000	251	255	

COLOR MACRO

Function	DMX From	DMX To	Note
No Function	0	1	Default @ 0
RED	2	3	
GREEN	4	5	
BLUE	6	7	
CYAN	8	9	
MAGENTA	10	11	
YELLOW	12	13	
DIRTY WHITE	14	15	
ALICE BLLUE	16	17	
CONGO BLUE	18	19	
DARK STEEL BLUE	20	21	
DEEP LAVENDER	22	23	
LILAC TING	24	25	
DAYLIGHT BLUE	26	27	
FLAME RED	28	29	
BASTARD AMBER	30	31	
DEEP ORANGE	32	33	
PALE GOLD	34	35	
APRICOT	36	37	
BRIGHT BLUE	38	39	
PRIMARY GREEN	40	41	
SPECIAL LAVENDER	42	43	
PALE LAVENDER	44	45	
DEEP GOLDEN AMBER	46	47	
MEDIUM BLUE	48	49	
BRIGHT PINK	50	51	
MAUVE	52	53	
DARK GREEN	54	55	
LEE GREEN	56	57	
DARK BLUE	58	59	
LIGHT BLUE	60	61	
STEEL BLUE	62	63	
MEDIUM BLUE-GREEN	64	65	
PEACOCK BLUE	66	67	
MAGENTA	68	69	
DARK PINK	70	71	
MIDDLE ROSE	72	73	
LIGHT SALMON	74	75	
ENGLISH ROSE	76	77	
LIGHT ROSE	78	79	
ORANGE	80	81	
DEEP AMBER	82	83	
STRAW	84	85	
LIGHT AMBER	86	87	
SPRING YELLOW	88	89	
DARK YELLOW GREEN	90	91	

COLOR MACRO

Function	DMX From	DMX To	Note
JUST BLUE	92	93	
SKY BLUE	94	95	
LAVENDER	96	97	
LIGHT LAVENDER	98	99	
PINK CARNATION	100	101	
MEDIUM PINK	102	103	
LIGHT PINK	104	105	
SUNSET RED	106	107	
DARK AMBER	108	109	
GOLD AMBER	110	111	
MEDIUM AMBER	112	113	
FIRE	114	115	
SURPRISE PEACH	116	117	
STRAW TINT	118	119	
MEDIUM YELLOW	120	121	
LEE MINUS GREEN	122	123	
PALE GOLD	124	125	
ORANGE	126	127	
DEEP STRAW	128	129	
ROSE PURPLE	130	131	
DEEP PURPLE	132	133	
SOFT GREEN	134	135	
RESERVED	136	209	
2700K	210	211	
2800K	212	213	
3000K	214	215	
3200K	216	217	
3400K	218	219	
3600K	220	221	
3800K	222	223	
4000K	224	225	
4200K	226	227	
4400K	228	229	
4600K	230	231	
4800K	232	233	
5000K	234	235	
5200K	236	237	
5400K	238	239	
5600K	240	241	
6000K	242	243	
6500K	244	245	
7000K	246	247	
8000K	248	249	
9000K	250	251	
10000K	252	253	
FULL ON	254	255	

PATTERN SELECTOR (RGBW PLATE & WHITE BEAM)

Function	DMX		Note
	From	To	
No pattern	0	9	Default @ 0
Pattern 1	10	14	
Pattern 2	15	19	
Pattern 3	20	24	
Pattern 4	25	29	
Pattern 5	30	34	
Pattern 6	35	39	
Pattern 7	40	44	
Pattern 8	45	49	
Pattern 9	50	54	
Pattern 10	55	59	
Pattern 11	60	64	
Pattern 12	65	69	
Pattern 13	70	74	
Pattern 14	75	79	
Pattern 15	80	84	
Pattern 16	85	89	
Pattern 17	90	94	
Pattern 18	95	99	
Pattern 19	100	104	
Pattern 20	105	109	
Pattern 21	110	114	
Pattern 22	115	119	
Pattern 23	120	124	
Pattern 24	125	129	
Pattern 25	130	134	
Pattern 26	135	139	
Pattern 27	140	144	
Pattern 28	145	149	
Pattern 29	150	154	
Pattern 30	155	159	
Pattern 31	160	164	
Pattern 32	165	169	
Pattern 33	170	174	
Pattern 34	175	179	
Pattern 35	180	184	
Pattern 36	185	189	
Pattern 37	190	194	
RESERVED	195	255	

PATTERN SPEED

Function	DMX		Note
	From	To	
Indexing	0	127	Default @ 0
CW from fast to slow	128	190	
Stop	191	192	
CCW from slow to fast	193	255	

PATTERN FADE

Function	DMX		Note
	From	To	
0% - 100% (From 0 ms to 5000 ms)	0	255	Default @ 0 Defines the fade time of the LEDs involved in an effect. For example, if the channel is set to 1 second and a random pixel effect is running, the pixels that go from on to off will take 1 second to fade out.

PATTERN TRANSITION

Function	DMX		Note
	From	To	
No fade	0	0	Default @ 0 Defines the fade time for transitioning between effects on the involved LEDs. For example, if the channel is set to 1 second and there is a change from one effect to another, such as from a random pixel effect to another, the transition will take 1 second to complete with a fade.
0% - 100% (From 0 ms to 5000 ms)	1	255	

PATTERN OPACITY

Function	DMX		Note
	From	To	
FX opacity 0%	0	0	Default @ 0 When set to 0, pixel effects are not visible, and the background/main color is displayed solidly. At a value of 255, the pixel effect is fully overlaid. Adjusting the value between 0 and 255 will gradually increase the visibility of the pixel effect over the background color.
Fx opacity 0% - 100%	1	255	

Control Channel

Function		8 bit value		16 bit value		Note
		From	To	From	To	
No Function / Safe		0	1	-	-	Default @ 0
DISPLAY	ON	2	3	-	-	Hold 3s to take function
	10s	4	5	-	-	
	20s	6	7	-	-	
	30s	8	9	-	-	
FLIP DISPLAY	ON	10	11	-	-	
	OFF	12	13	-	-	
KEY LOCK	ON	14	15	-	-	
	OFF	16	17	-	-	
DIMMER CURVE PLATE	LINEAR	18	19	-	-	
	S-CURVE	20	21	-	-	
	SQUARE LAW	22	23	-	-	
	INVERSE SQUARE LAW	24	25	-	-	
	HIGH RES@LOW	26	27	-	-	
DIMMER SPEED PLATE	AUTO	28	29	-	-	
	FAST	30	31	-	-	
	MEDIUM	32	33	-	-	
	SLOW	34	35	-	-	
	OFF	36	37	-	-	
DIMMER	FADE OFF END	38	39	-	-	
	SNAP OFF END	40	41	-	-	
Reserved		42	43	-	-	
SPEKTRA CALIBRATION	PURE COLORS	44	45	-	-	
	OFF	46	47	-	-	
Reserved		48	51	-	-	
WHITE POINT	3200K	52	53	-	-	
	4000K	54	55	-	-	
	5600K	56	57	-	-	
	6000K	58	59	-	-	
	8000K	60	61	-	-	
	OFF	62	63	-	-	
LED FREQUENCY	1000Hz	64	65	-	-	
	2000HZ	66	67	-	-	
	4000HZ	68	69	-	-	
	6000HZ	70	71	-	-	
	10KHz	72	73	-	-	
	25KHZ	74	75	-	-	
DMX FAULT	HOLD	76	77	-	-	
	BLACKOUT	78	79	-	-	
	STAND ALONE	80	81	-	-	
	EMERGENCY	82	83	-	-	
INVERT MAPPING	OFF	84	85	-	-	
	INVERT PLATE	86	87	-	-	
	INVERT BEAM	88	89	-	-	
	INVERT ALL	90	91	-	-	

Control Channel

Function		8 bit value		16 bit value		Note
		From	To	From	To	
STANDALONE	MASTER	92	93	-	-	
	MASTER NO DMX	94	95	-	-	
	SLAVE	96	97	-	-	
	TOUR FX	98	99	-	-	
	HSI	100	101	-	-	
	FIXED COLORS	102	103	-	-	
	WHITE PRESETS	104	105	-	-	
	COLOR MACRO	106	107	-	-	
	MANUAL COLORS	108	109	-	-	
FAN MODE	CO AUTO	110	111	-	-	
	CO HIGH	112	113	-	-	
	CO SILENT 1	114	115	-	-	
	CO SILENT 2	116	117	-	-	
	CO OFF	118	119	-	-	
	DO AUTO	120	121	-	-	
	DO HIGH	122	123	-	-	
	DO SILENT 1	124	125	-	-	
	DO SILENT 2	126	127	-	-	
	DO OFF	128	129	-	-	
CROSSFADE TO PIXEL ENGINE TYPE	OFF	130	131	-	-	
	FOLLOW DIMMER SPEED PLATE	132	133	-	-	
DIMMER CURVE BEAM	LINEAR	134	135	-	-	
	S-CURVE	136	137	-	-	
	SQUARE LAW	138	139	-	-	
	INVERSE SQUARE LAW	140	141	-	-	
	HIGH RES@LOW	142	143	-	-	
DIMMER SPEED BEAM	AUTO	144	145	-	-	
	FAST	146	147	-	-	
	MEDIUM	148	149	-	-	
		150	151	-	-	
	OFF	152	153	-	-	
TUNGSTEN EMULATION	ON	154	155	-	-	
	OFF	156	157	-	-	
Reserved		158	249	-	-	
Reset dimmer setting to defaults		250	251	-	-	
Reset all channel controlled		252	253	-	-	
Reserved		254	255	-	-	

5.5 PIXEL DEFINITION - RGBW PLATES

Fig. 09

5.6 PIXEL DEFINITION - WHITE BEAM

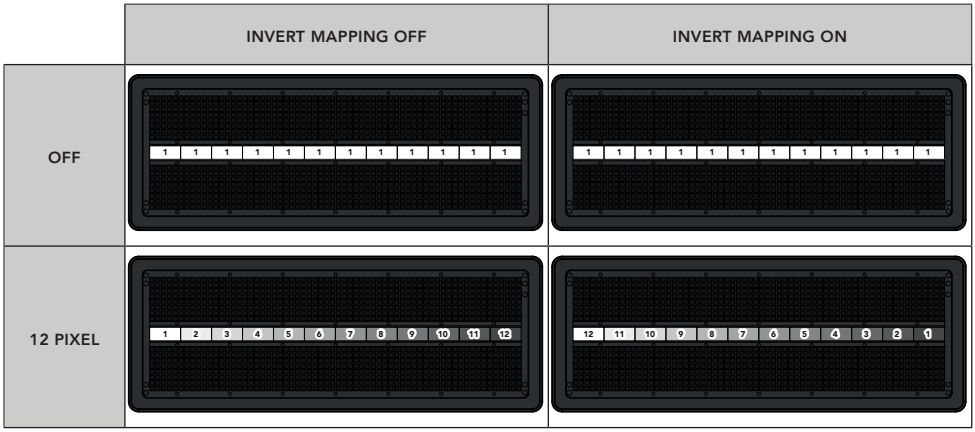

Fig. 10

6 RDM FUNCTIONS

The product can communicate using RDM (Remote Device Management) protocol over a DMX512 Networks.
RDM is a bi-directional communications protocol for use in DMX512 control systems, it is the open standard for DMX512 device configuration and status monitoring.
The RDM protocol allows data packets to be inserted into a DMX512 data stream without affecting existing non-RDM equipment. It allows a console or dedicated RDM controller to send commands to and receive messages from specific fixtures.
The PIDs in the following tables are supported in the product.

Category	Parameter	Value	GET	SET
RDM Information	SUPPORTED_PARAMETERS	0x0050	x	
	PARAMETER_DESCRIPTION	0x0051	x	
Product Information	PRODUCT_DETAIL_ID_LIST	0x0070	x	
	DEVICE_MODEL_DESCRIPTION	0x0080	x	
	MANUFACTURER_LABEL	0x0081	x	
	DEVICE_LABEL	0x0082	x	x
	FACTORY_DEFAULTS	0x0090	x	x
DMX512 Setup	DMX_PERSONALITY	0x00E0	x	x
	DMX_PERSONALITY_DESCRIPTION	0x00E1	x	
	DMX_START_ADDRESS	0x00F0	x	x
	SLOT_INFO	0x0120	x	
	SLOT_DESCRIPTION	0x0121	x	
	DEFAULT_SLOT_VALUE	0x0122	x	
Sensors	SENSOR_DEFINITION	0x0200	x	
	SENSOR_VALUE	0x0201	x	x
Dimmer Settings	DIMMER_INFO	0x0340	x	
	CURVE	0x0343	x	x
	CURVE_DESCRIPTION	0x0344	x	x
	OUTPUT_RESPONSE_TIME	0x0345	x	x
	OUTPUT_RESPONSE_TIME_ DESCRIPTION	0x0346	x	
	MODULATION_FREQUENCY	0x0347	x	x
	MODULATION_FREQUENCY_ DESCRIPTION	0x0348	x	
Power/Lamp Settings	DEVICE_HOURS	0x0400	x	x
	LAMP_HOURS	0x0401	x	x
	LAMP_MODE	0x0404	x	x
	DEVICE_POWER_CYCLES	0x0405	x	x
Display Settings	DISPLAY_INVERT	0x0500	x	x
Configuration	LOCK_STATE	0x0641	x	x
	LOCK_STATE_DESCRIPTION	0x0642	x	
Control	IDENTIFY_MODE	0x1040	x	x

Manufacturer Specific PIDs

Parameter	PID	GET	SET	Value	Description
MASTER/SLAVE	0x8211	x	x	0-2	0:Master DMX 1:Master NO DMX **2: Slave**
SPEKTRA CALIBRATION	0x822F	x	x	1-2	**1: Pure colors** 2: Off
FIXED COLOR	0x82BE	x	x	0-14	0: R 1: G 2: B 3: W 4: RG 5: RB 6: RW 7: GB 8: GW 9: BW 10:RGB 11:RGW 12:RBW 13:GBW **14:RGBW**
WHITE PRESETS	0x82BF	x		0-16	0: 2700K 1: 2800K **2: 3200K** 3: 3500K 4: 4000K ... 16:10000K
MANUAL RED	0x82C0	x	x	0-255	**DEFAULT: 255**
MANUAL GREEN	0x82C1	x	x	0-255	**DEFAULT: 255**
MANUAL BLUE	0x82C2	x	x	0-255	**DEFAULT: 255**
MANUAL WHITE	0x82C3	x	x	0-255	**DEFAULT: 255**
DMX FAULT	0x82DD	x	x	0-3	0: Hold 1: Blackout **2:Stand Alone** 3:Emergency
INVERT MAPPING	0x82E1	x		0-2	0: Invert plate 1: Invert beam **2: Invert all**
PIXEL DMX ADDRESS	0x82E6	x	x	1-512	**DEFAULT: 1**
ERROR MESSAGES	0x82EA	x		0-2	
STAND ALONE MODE	0x82EC	x	x	0-6	0: TOUR FX 1: CCT 2: HSI 3: FIXED COLORS 4: WHITE PRESETS 5: COLOR MACRO 6: MANUAL COLORS
COLOR MACROS	0x82ED	x	x	0-64	Refer to DMX charts
WIRELESS QUALITY	0x82F4	x		0-100%	
SETTINGS SELECTOR	0x8309	x	x	1-5	
STAND ALONE DIMMER	0x8360	x	x	0-255	**DEFAULT: 255**

7 ERROR MESSAGES

The error is shown on the unit display. In the table below, the "ERROR SHOWED ON SCREEN" column lists the possible errors, accompanied by a possible cause ("POSSIBLE" CAUSES "column).

ERROR SHOWED ON SCREEN	POSSIBLE CAUSES	POSSIBLE PCB WITH ANOMALY
[CTR1 ERROR]	Comunication error of the LED PCB	BEAM PCB
[CTR2_1 ERROR]	Comunication error of the LED PCB	PLATE 1 PCB
[CTR2_2 ERROR]	Comunication error of the LED PCB	PLATE 2 PCB
[LED_1 TEMP ERROR]	Temperature sensor fault / Temperature too high	BEAM PCB
[LED_2 TEMP ERROR]	Temperature sensor fault / Temperature too high	PLATE 1 PCB
[LED_3 TEMP ERROR]	Temperature sensor fault / Temperature too high	PLATE 2 PCB
[MAINTENANCE TIME]	Maintenance needed	-

8 ACCESSORIES INSTALLATION

DIFFUSION FILTERS

(CODES SBLFLXFILTHD, SBLFLXFILTMD, SBLFLXFILTBK - OPTIONAL)

1

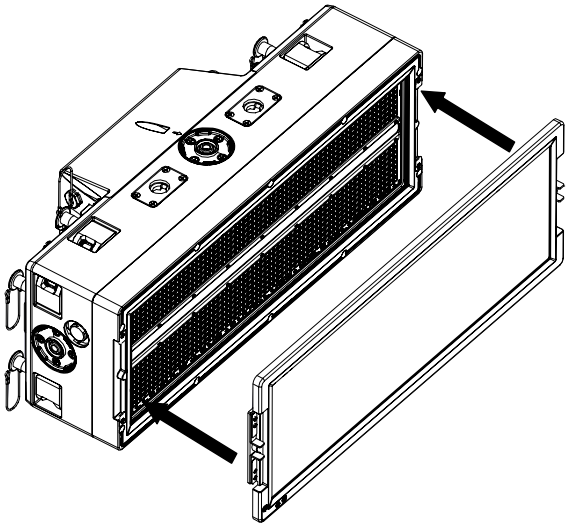

Gently place the filter in front of the fixture.

2

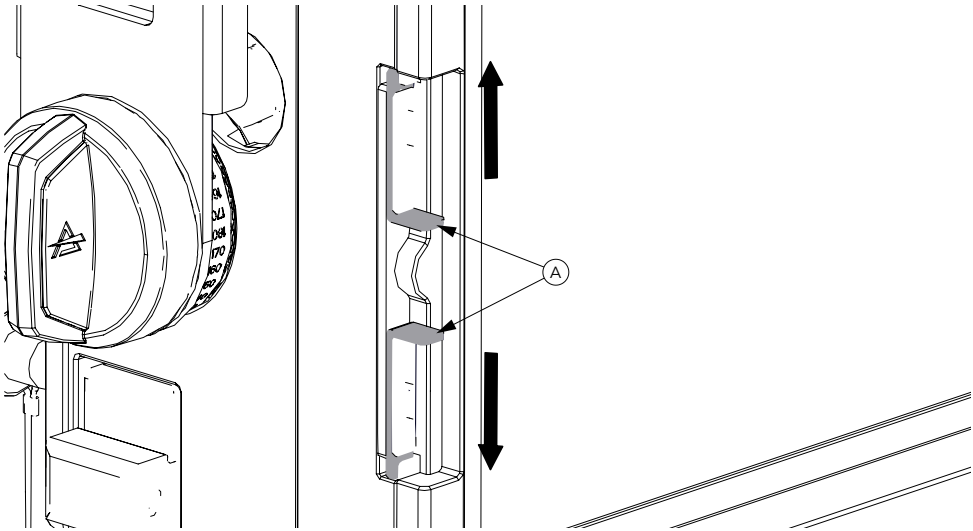

Once positioned correctly, secure the two clips as indicated by the arrow (A).
To remove the filter, please reverse the steps

NOTE: *The SBLFLXFILTBK filter needs to be used exclusively in combination with the SBLFLXSPACER.*

Fig. 11

SPACER FOR FILTERS
(CODE SBLFLXSPACER - OPTIONAL)

1

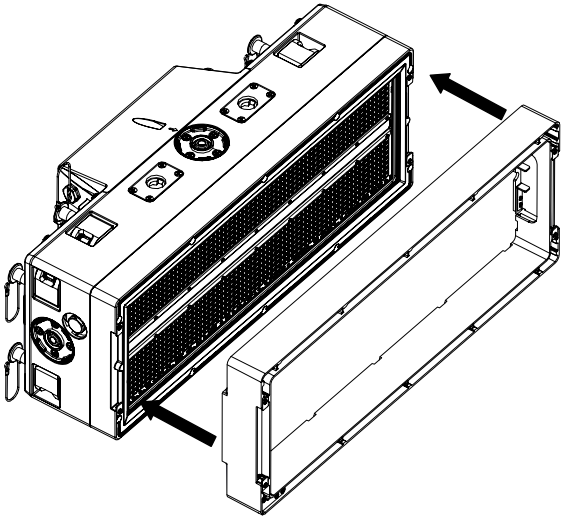

Gently place the spacer in front of the fixture.

2

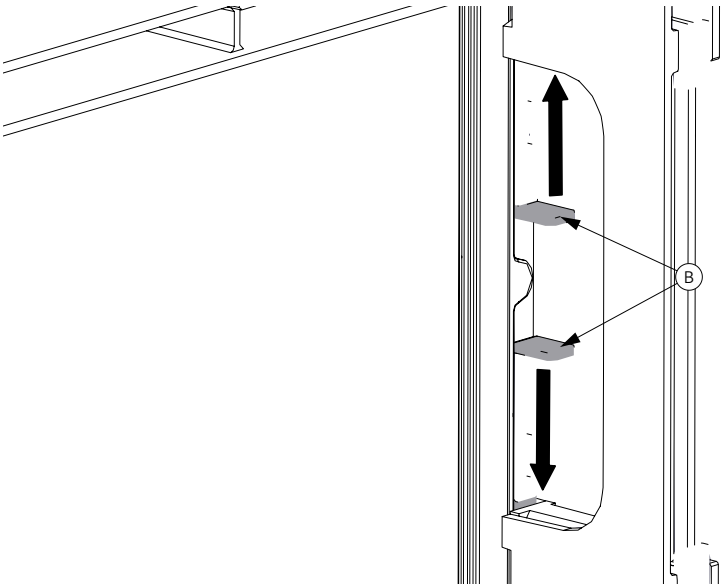

Once positioned correctly, secure the two clips as indicated by the arrow (B).
To remove the filter, please reverse the steps

NOTE: *Once the spacer is mounted, the filters can be installed as explained in the previous page.*

Fig. 12

BRACKETS

(CODES SBLFLXB01V, SBLFLXB02H, SBLFLXB02V, SBLFLXADPFLR - OPTIONAL)

1

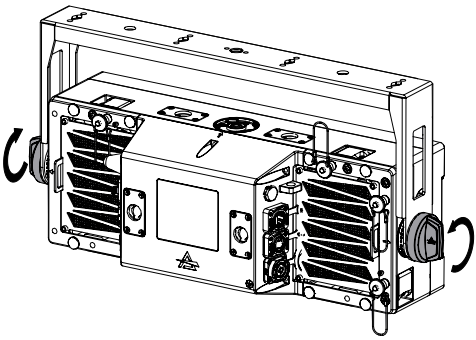

2

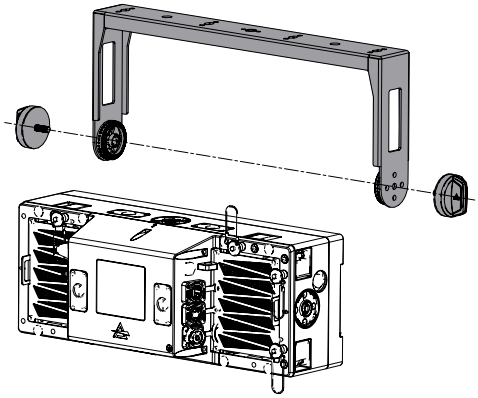

First remove the bracket's knobs (**1**), then remove the **SBLFLXB01H** included bracket (**2**).

SBLFLXB01V

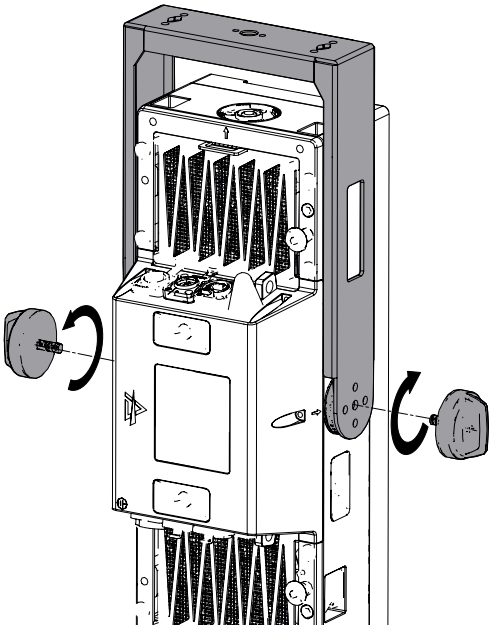

Once the standard bracket has been removed it is possible to install vertical bracket **SBLFLXB01V**.

Fig. 13

SBLFLXB02H

1

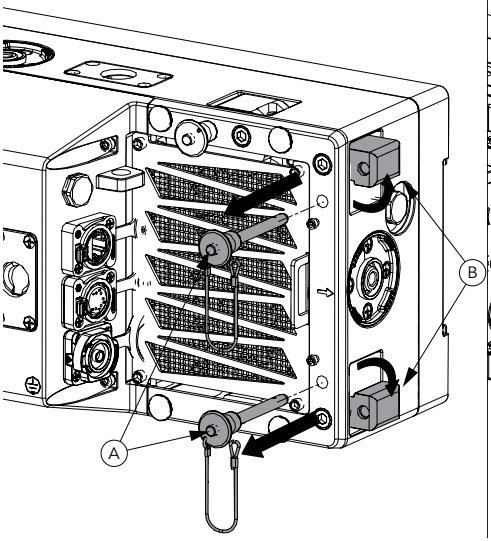

2

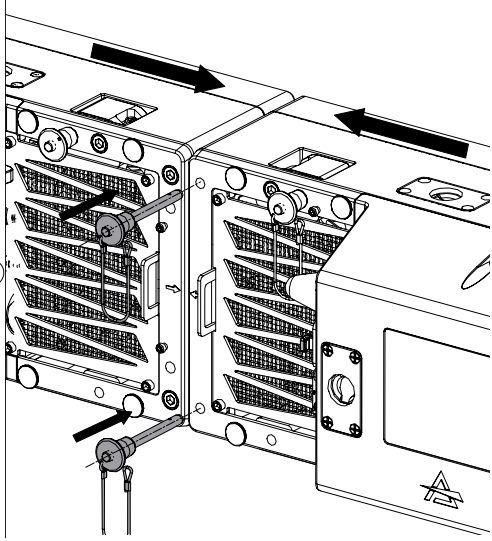

First remove the two pins (**1**) pressing their buttons (A), the mechanics will open automatically (B).
Now you can place another fixture locking the pins of the mechanics (**2**)

3

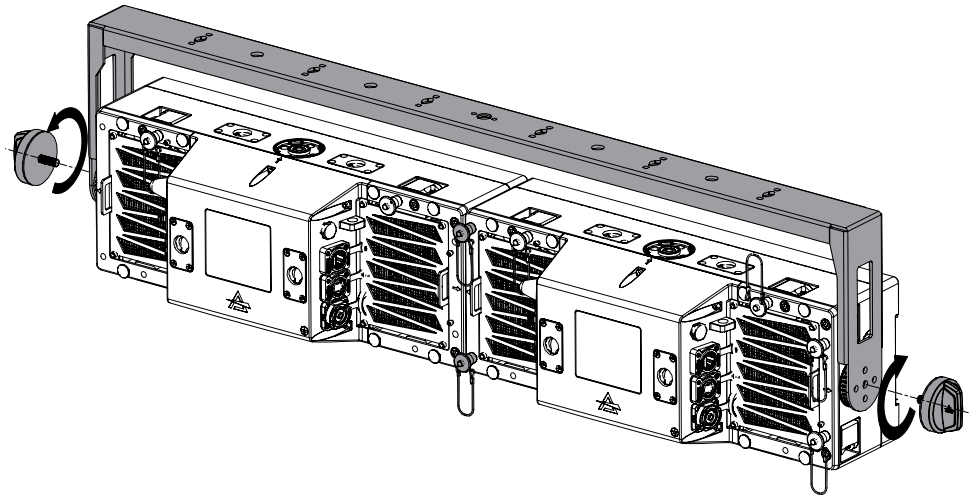

Now you can place **SBLFLXB02H** and fix it with the knobs.

Fig. 14

SBLFLXB02V

1

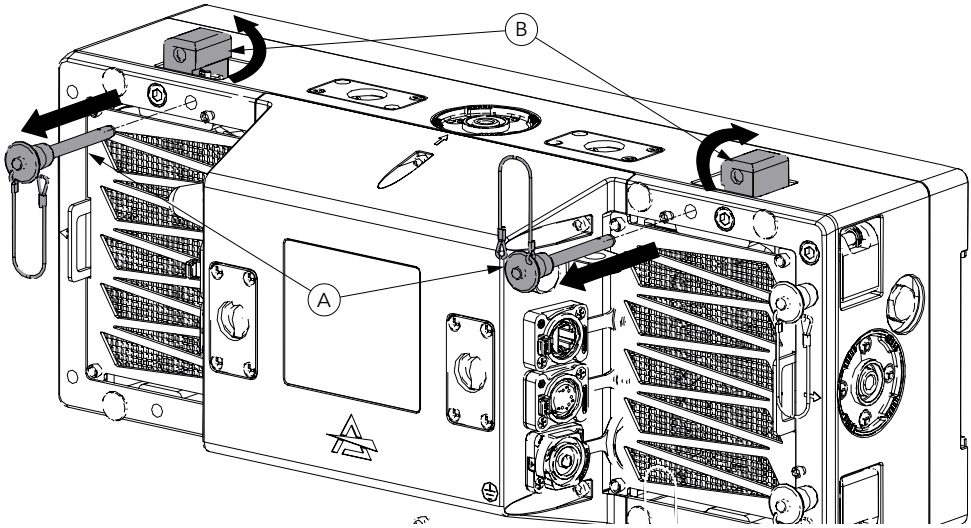

First remove the two pins (**1**) pressing their buttons (A), the mechanics will open automatically (B).

2

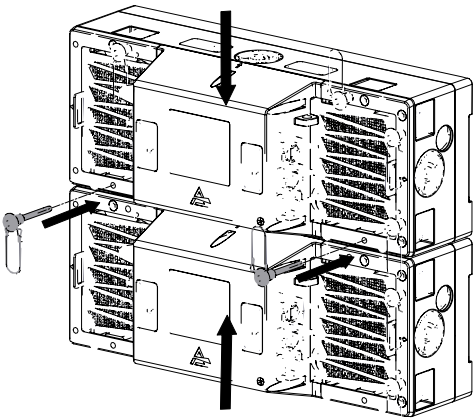

3

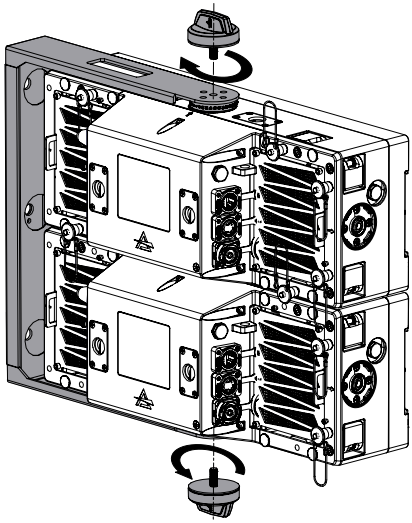

Now you can place another fixture locking the pins of the mechanics (**2**);
Then you can place **SBLFLXB02V** and fix it with the knobs.

Fig. 15

SBLFLXHHFLRB

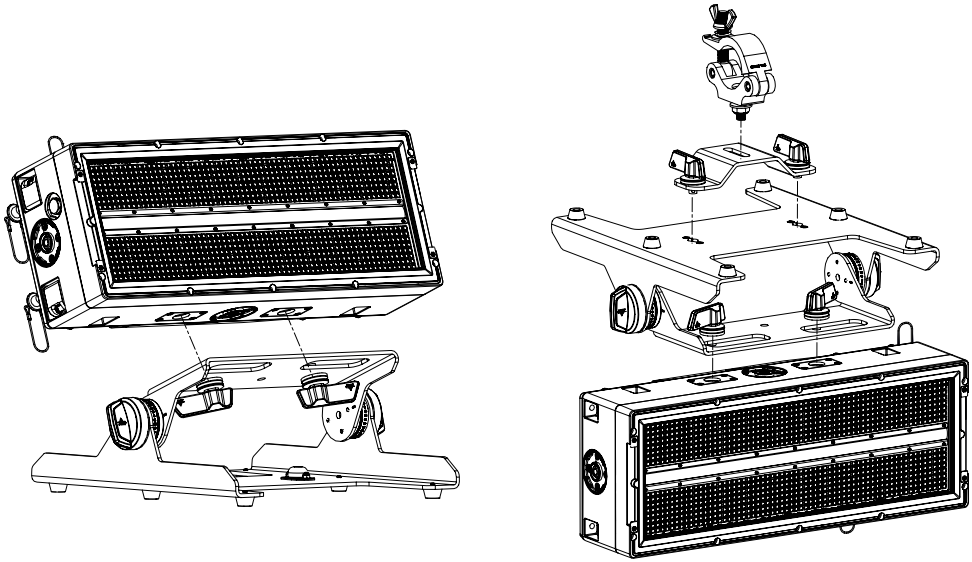

This tiltable bracket can be used for both hanging and floor installations.

SBLFLXADPFLR

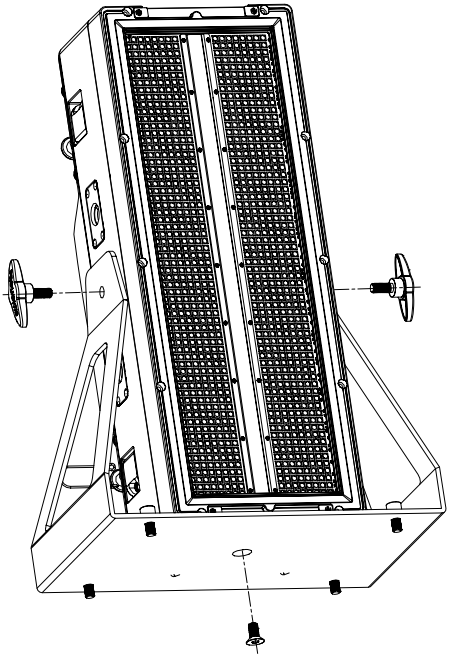

Fig. 16

SBLFLXFLR

1

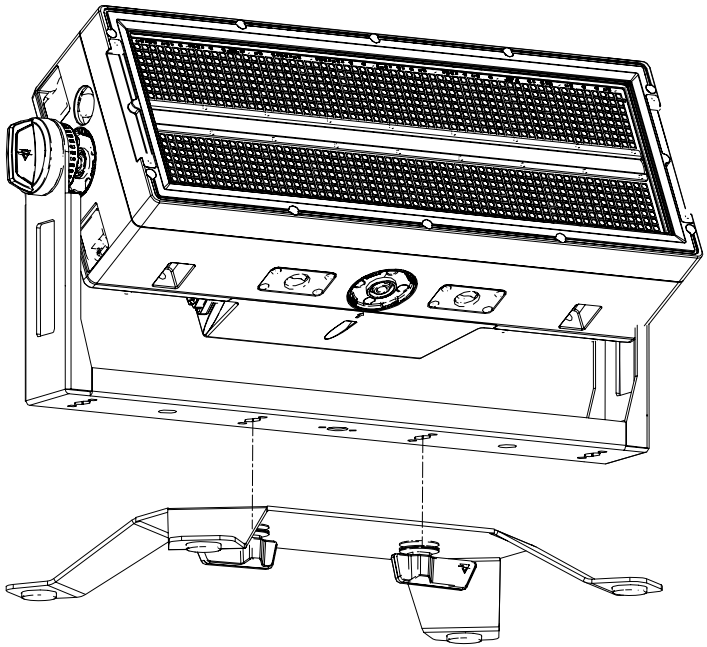

2

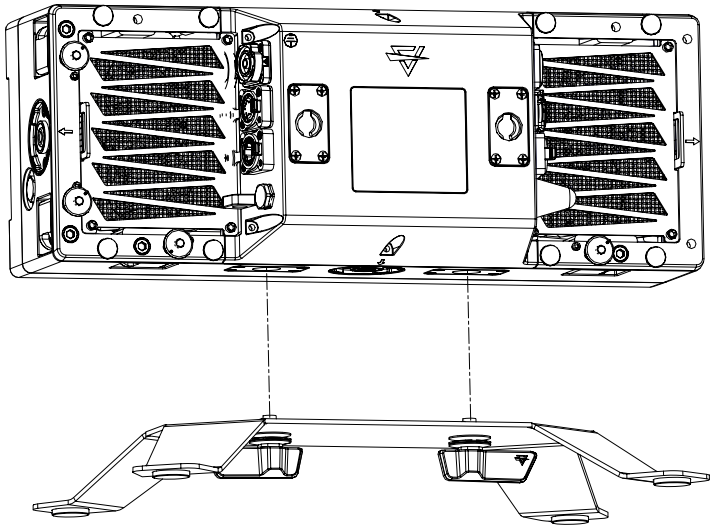

NOTE: **SBLFLXFLR** can be installed also directly on the fixture (**2**), be sure that will be mounted on the top side, and activate the invert mapping on the menu.

Fig. 17

HANGING BRACKETS

(CODES SBLFLXHB01H, SBLFLXHB005V - OPTIONAL)

SBLFLXHB01H

1

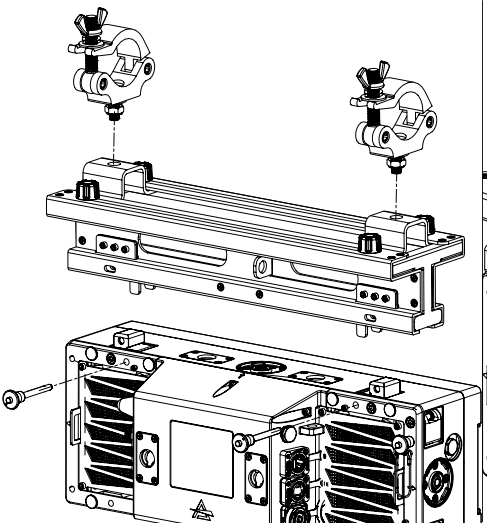

2

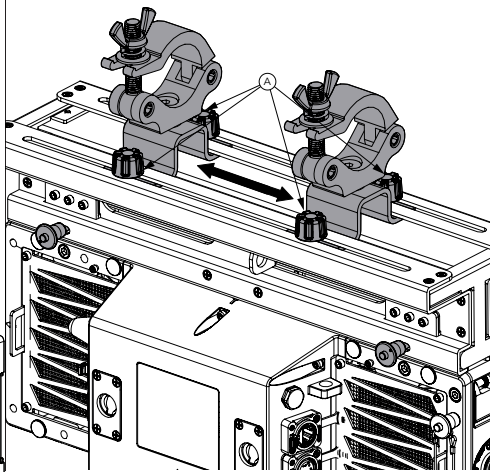

First remove the pins and place the **SBLFLXB01H** (**1**), then is possible to adjust the position (**2**) using the marked knobs (A)

SBLFLXHB005V

1

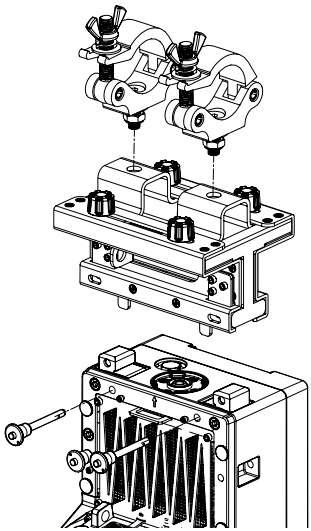

2

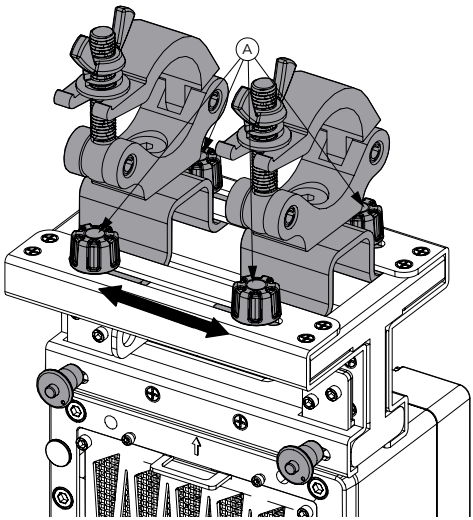

First remove the pins and place the **SBLFLXB01H** (**1**), then is possible to adjust the position (**2**) using the marked knobs (A)

Fig. 18

8.1 CLUSTER CONFIGURATION

OPTION 1

1

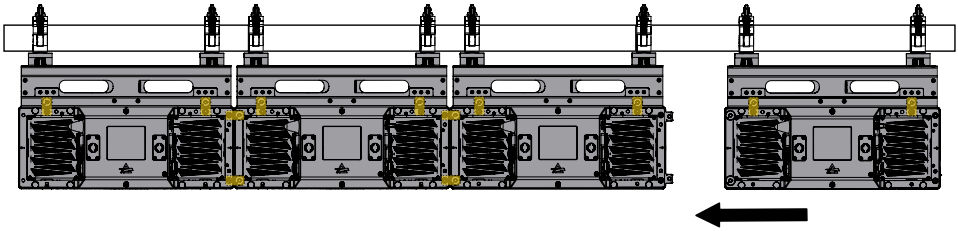

First assemble the first raw, locking all the mechanics as shown on the figure (1).

2

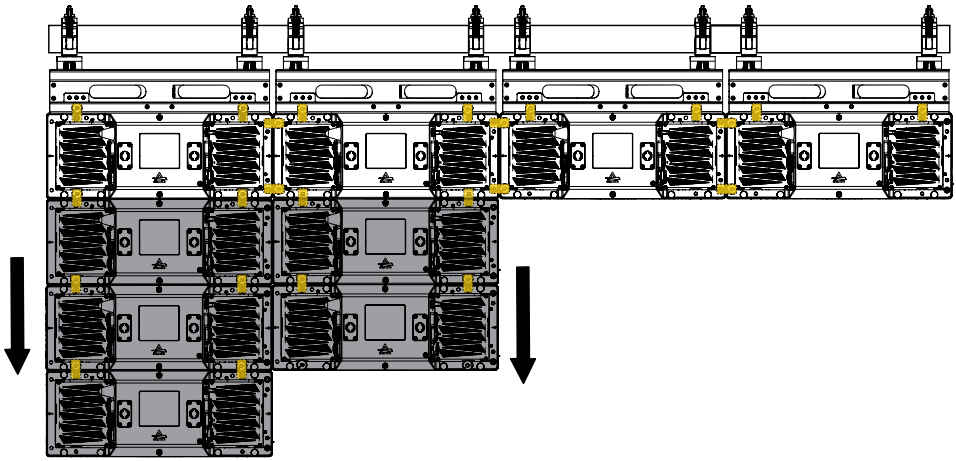

Then assemble each column locking the mechanics on top as shown on the figure (2).

Fig. 19

OPTION 2

1

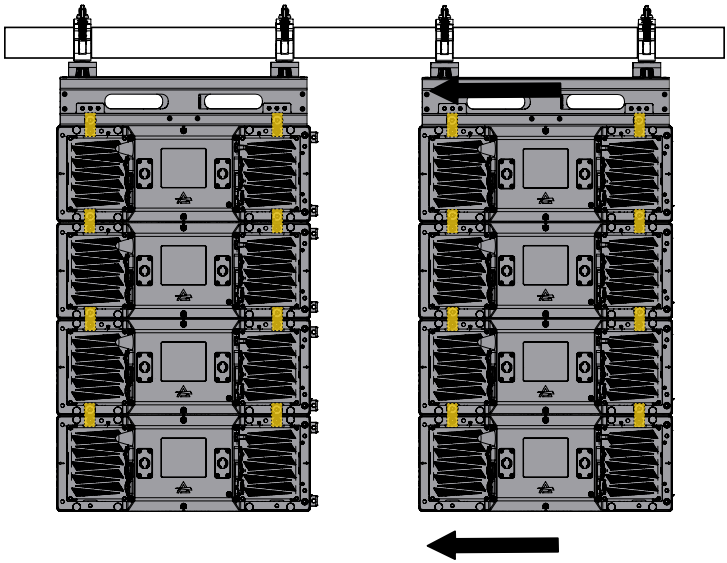

First assemble each column locking the mechanics on top.

2

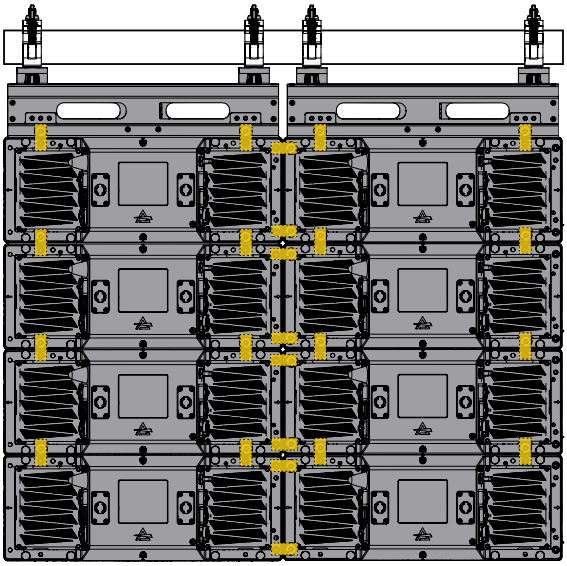

Then is possible to mount each column locking the side mechanics.

Fig. 20

8.2 MAXIMUM LOADING UNITS

SBLFLXB01H

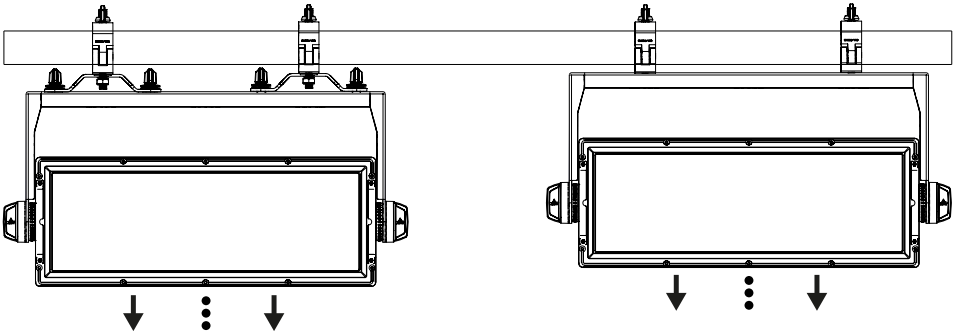

Possible hanging up to 10 Units

SBLFLXB02H

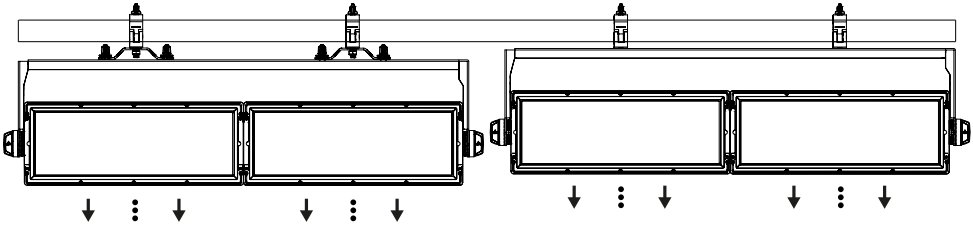

Possible hanging up to 8x2 Units

SBLFLXB01V

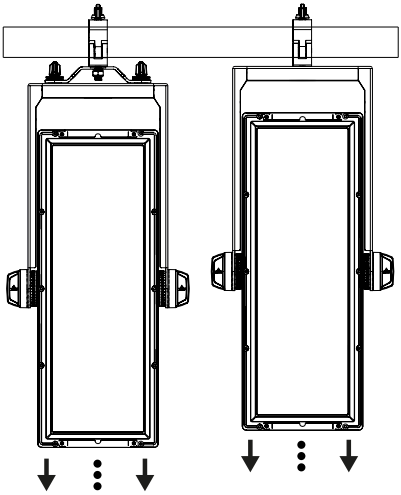

Possible hanging up to 8 Units

SBLFLXADPFLR

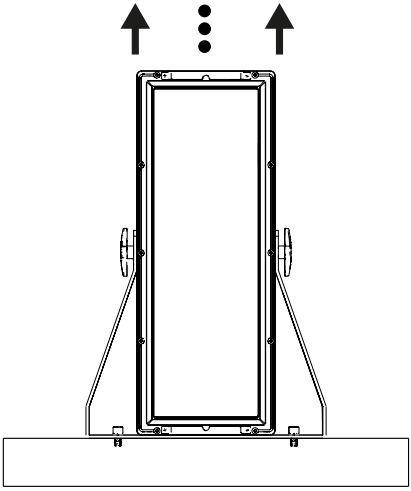

Possible hanging up to 10 Units

SBLFLXB02V

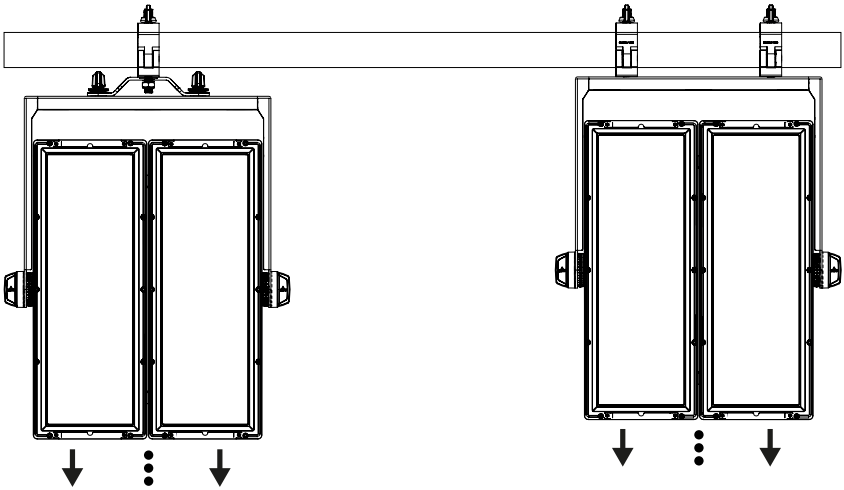

Possible hanging up to 4x2 Units

SBLFLXHB01H - SBLFLXHB005V

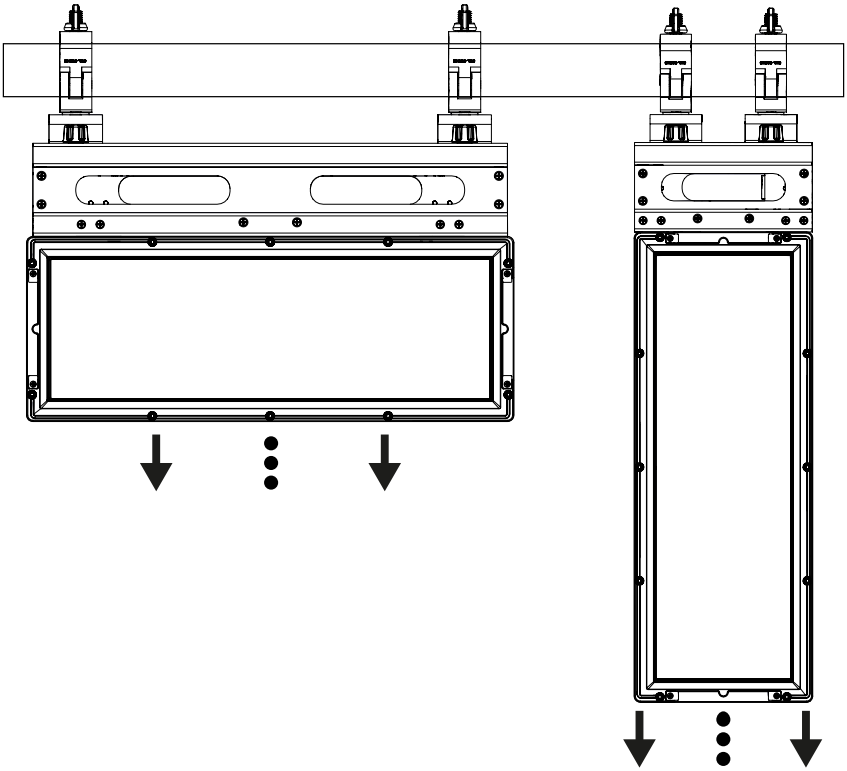

Possible hanging up to 10 Units

9 MAINTENANCE

9.1 MAINTENANCE AND CLEANING THE PRODUCT

WARNING: Disconnect from the mains before starting any maintenance work

It is recommended to clean the front at regular intervals, from impurities caused by dust, smoke, or other particles to ensure that the light is radiated at maximum brightness.

- For cleaning, disconnect the main plug from the socket. Use a soft, clean cloth moistened with a mild detergent. Then carefully wipe the part dry. For cleaning other housing parts use only a soft, clean cloth. Never use a liquid, it might penetrate the unit and cause damage to it.
- The user must clean the product periodically to maintain optimum performance and cooling. The user may also upload firmware (product software) to the fixture via the DMX signal input port or USB port using firmware and instructions from PROLIGHTS.
- The frequency of such maintenance operations is to be performed according to various factors, such as the amount of the use and the condition of the installation environment (air humidity, presence of dust, salinity, etc.). It is recommended that the product is subject to annual service by a qualified technician for special maintenance involving at least the following procedures:
- General cleaning of internal parts.
- For all the parts subject to friction, using lubricants specifically supplied by PROLIGHTS.
- General visual check of the internal components, cabling, mechanical parts, etc.
- Electrical, photometric and functional checks; eventual repairs.
- Cleaning the lenses. Only use neutral soap and water to clean the lenses, then dry it carefully with a soft, non-abrasive cloth.

WARNING: the use of alcohol or any other detergent could damage the lenses.

- **Only for IP65/IP66 projectors**: It is recommended to verify IP grade using IPTESTBOX every time the bodies are removed for maintenance, this tool helps to double check the correct assembling of the covers with a check of the IP grade of the fixture.
- All other service operations on the product must be carried out by PROLIGHTS, its approved service agents or trained and qualified personnel.
- It is PROLIGHTS policy to apply the strictest possible calibration procedures and use the best quality materials available to ensure optimum performance and the longest possible component lifetimes. However, optical components are subject to wear and tear over the life of the product, resulting in gradual changes in colours over many thousands of hours of use. The extent of wear and tear depends heavily on operating conditions and environment, so it is impossible to specify precisely whether and to what extent performance will be affected. However, you may eventually need to replace optical components if their characteristics are affected by wear and tear after an extended period of use and if you require fixtures to perform within very precise optical and colour parameters.
- Do not apply filters, lenses or other materials on lenses or other optical components. Use only accessories approved by PROLIGHTS.

9.2 VISUAL CHECK OF PRODUCT HOUSING

- The parts of the product cover/housing should be checked for eventual damages and breaking start at least every two months. In addition, especially the parts of the front lens holder have to be checked mechanically (by means of movement by the part) if it is firmly fastened to the fixture. If hint of a crack is found on some plastic part, do not use the product until the damaged part will be replaced.
- Cracks or another damages of the cover/housing parts can be caused by the product transportation or manipulation and also ageing process may influence materials.
- This checking is necessary for both fixed installations and preparing product for renting. Any free moving parts inside of the product, cracked cover/housing or any part of front lens not sitting properly in place need to be immediately replaced.

9.3 TROUBLESHOOTING

Problems	Possible causes	Checks and remedies
Product doesn't power ON	• No power to the product.	• Check that power is switched ON and cables are plugged in.
	• Fuse blown or internal fault.	• Contact the PROLIGHTS Service or authorized service partner. Do not remove parts and/or covers, or carry out any repairs or service that are not described in this Safety and User Manual unless you have both authorization from PROLIGHTS and the service documentation.
Product reset correctly but does not respond correctly to the contoller.	• Bad signal connection.	• Inspect connections and cables. Fix eventual bad connections. Repair or replace damaged cables.
	• Signal connection not terminated.	• Insert DMX termination plug in signal output socket of the last product on the signal line.
	• Incorrect addressing of the product.	• Check the product address and control settings.
	• One of the product is defective and is corrupting the signal transmission on the signal line.	• Unplug the XLR in and out connectors and connect them directly together to bypass one product at a time until normal operation is regained. Once found the error, have that fixture serviced by a qualified technician.
Timeout error after fixture reset.	• One or more hardware components requires mechanical adjustments.	• Check product stored error messages for more information. Contact PROLIGHTS Service or an authorized service partner.
Mechanical effect loses position	• Mechanical hardware require cleaning, adjustment or lubrification.	• Check product stored error messages for more information. Contact PROLIGHTS Service or an authorized service partner.
Light output turn OFF Intermittently	• Fixture is too hot.	• Check product stored error messages. • Allow product to cool. • Clean the product and airflow filters. • Reduce ambient temperature.
	• Hardware failure (temperature sensor, fans, Light source...).	• Check product stored error messages for more information. Contact PROLIGHTS Service or an authorized service partner.
General low light intensity	• Dirty lens assembly • Dirty or damaged filters	• Clean the fixture regularly. • Install lens assembly properly.

Contact an authorized service center in case of technical problems or not reported in the table can not be resolved by the procedure given in the table.

9.4 IP65 RATING TEST

It is recommended to verify IP grade using IPTESTBOX every time the bodies are removed for maintenance.

1

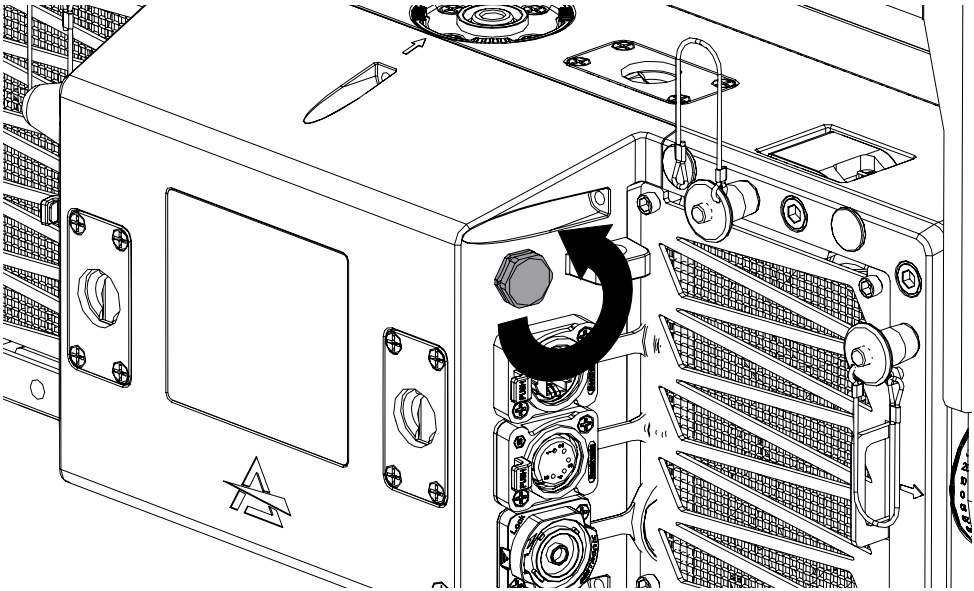

Remove the first gore valve from the side of the projector.

2

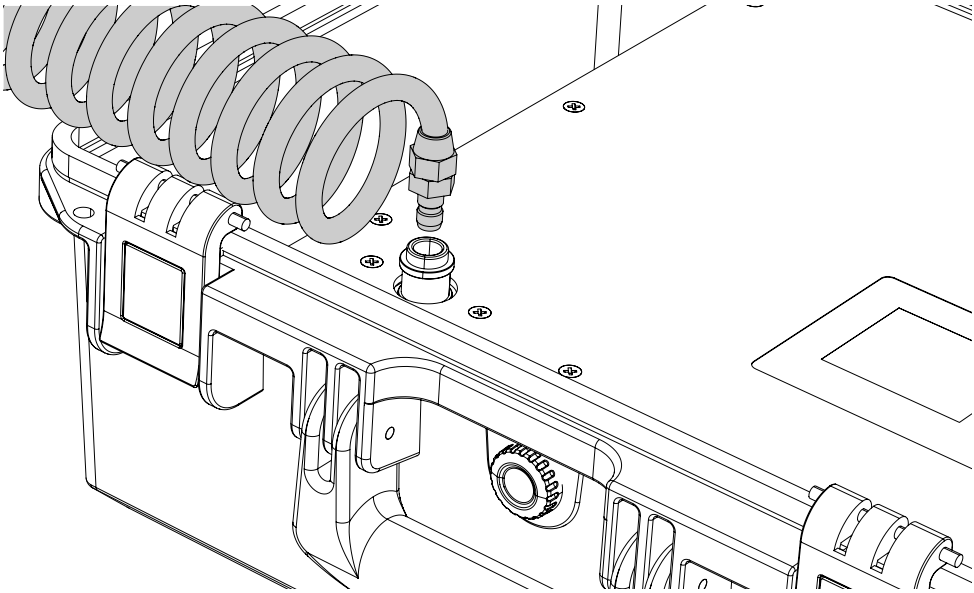

Connect the air hose to the IPTESTBOX by inserting the quick-connect fitting into the coupler.

3

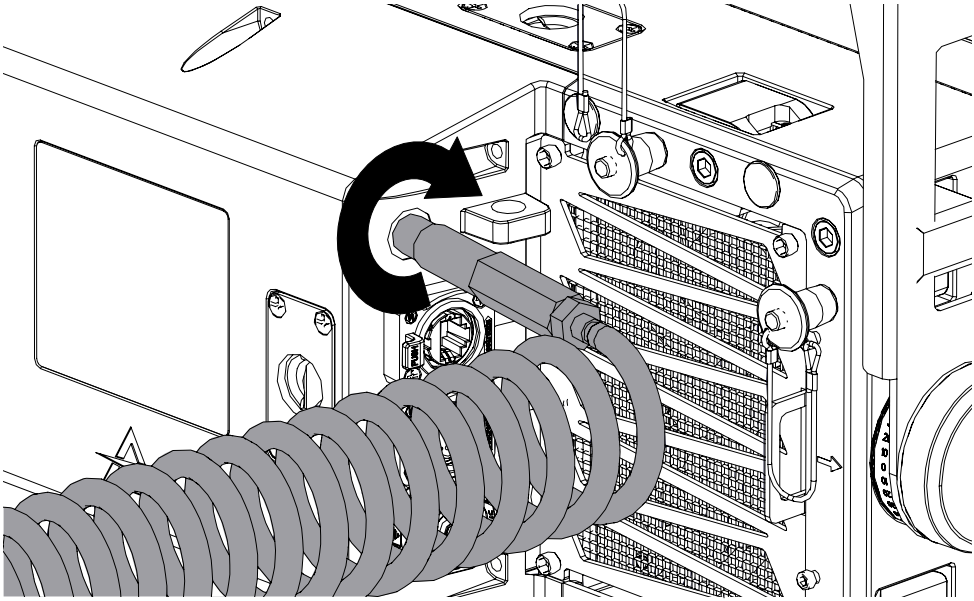

Insert the threaded end into the threaded valve hole socket.

4

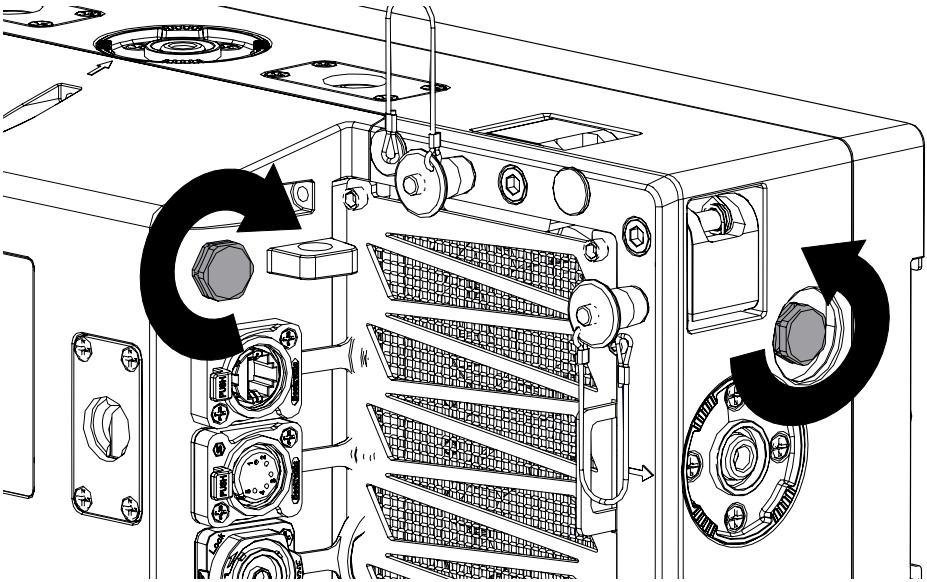

For the operating procedure using the instrument, refer to the IPTESTBOX user manual.
Repeat the same process with the second gore valve

Fig. 19

Note

PROLIGHTS is a trademark of
MUSIC & LIGHTS S.r.l.
musiclights.it

Via A.Olivetti snc
04026 - Minturno (LT) ITALY
Tel: +39 0771 72190

prolights.it
support@prolights.it