EclExpoFlood FC Series

150W and 300W Full Colour RGB+WarmWhite asymmetric LED floodlight, IP20 and IP65 rated

USER MANUAL

Rev. 29-Oct-25

English version

Thank you for choosing PROLIGHTS

Please note that every PROLIGHTS product has been designed in Italy to meet quality and performance requirements for professionals and designed and manufactured for the use and application as shown in this document.

Any other use, if not expressly indicated, could compromise the good condition/operation of the product and/or be a source of danger.
This product is meant for professional use. Therefore, commercial use of this equipment is subject to the respectively applicable national accident prevention rules and regulations.

Features, specifications and appearance are subject to change without notice. Music & Lights S.r.l. and all affiliated companies disclaim liability for any injury, damage, direct or indirect loss, consequential or economic loss or any other loss occasioned by the use of, inability to use or reliance on the information contained in this document.

Product user manual can be downloaded from the website www.prolights.it , or can be inquired to the official PROLIGHTS distributors of your territory (***https://www.prolights.it/sales_network.html***).

Scanning the below **QR Code**, you will access the download area of the product page, where you can find a broad set of always updated technical documentation: specifications, user manual, technical drawings, photometrics, personalities, fixture firmware updates.

ECLEXPOFL150FC **ECLEXPOFL150IPFC**

Visit the download area of the product pages

ECLEXPOFL300FC **ECLEXPOFL300IPFC**

The PROLIGHTS Logo, PROLIGHTS names and all other trademark in this document pertaining to PROLIGHTS services or PROLIGHTS product are trademarks OWNED or licensed by Music & Lights S.r.l., its affiliates, and subsidiaries. PROLIGHTS is a registered trademark by Music & Lights S.r.l. All right reserved. Music & Lights – Via A. Olivetti, snc - 04026 - Minturno (LT) ITALY.

INDEX

SAFETY INFORMATION 02

PACKAGING 06
- PACKAGE CONTENT ... 06
- OPTIONAL ACCESSORIES ... 06

TECHNICAL DRAWING 07

INSTALLATION 09
- MOUNTING ... 09

CONNECTION TO THE MAINS SUPPLY 10

START UP 10
- CONNECT AND DISCONNECT POWER FROM THE PRODUCT ... 10

PRODUCT OVERVIEW 11

DMX CONNECTION 12

CONTROL PANEL 15
- DISPLAY AND BUTTONS LAYOUT ... 15
- SHORTCUTS ... 15

MENU STRUCTURE 16
- MASTER/SLAVE ... 22
- DIMMER CURVES ... 23
- DIMMER SPEEDS ... 24
- USER SETTINGS ... 24

DMX CHARTS 25
- DMX BASIC MODES ... 25
- CHANNEL DEFINITION ... 26

RDM FUNCTIONS 32

ACCESSORIES INSTALLATION 34
- FILTER FRAME ... 34
- BARN DOOR ... 35

MAINTENANCE 36
- MAINTENANCE AND CLEANING THE PRODUCT ... 36
- REPLACING THE FUSE ... 36
- VISUAL CHECK OF PRODUCT HOUSING ... 36
- TROUBLESHOOTING ... 37

TEST OF IP65 RATING 38

SAFETY INFORMATION

WARNING!

- Please read carefully the instruction reported in this section before installing, powering, operating or servicing the product and observe the indications also for its future handling.

This unit is not for household use, only professional applications.

Connection to mains supply

- The Connection to the mains supply must be carried out by a qualified electrical installer.
- Use only AC supplies 100-240V 50-60 Hz, the fixture must be electrically connected to ground (earth).
- Select the cable cross section in according with the maximum current draw of the product and the possible number of products connected at the same power line.
- The AC mains power distribution circuit must be equipped with magnetic+residual current circuit breaker protection.
- Do not connect it to a dimmer system; doing so may damage the product.

Protection and Warning against electrical shock

- Do not remove any cover from the product, always disconnect the product from AC power before servicing.
- Ensure that the fixture is electrically connected to ground (earth). And use only a source of AC power that complies with local building and electrical codes and has both overload and ground-fault (earth-fault) protection.
- Before using the fixture, check that all power distribution equipment and cables are in perfect condition and rated for the current requirements of all connected devices.
- Isolate the fixture from power immediately if the power plug or any seal, cover, cable, or other components are damaged, defective, deformed or showing signs of overheating.
- Do not reapply power until repairs have been completed.
- Refer any service operation not described in this manual to PROLIGHTS Service team or an authorized PROLIGHTS service center.

Installation

- Make sure that all visible parts of the product are in good visible condition before its use or installation.
- Make sure the point of anchorage is stable before positioning the projector.
- When suspending the fixture above ground level, secure it against failure of primary attachments by attaching a safety cable that is approved as a safety attachment for the weight of the fixture to the attachment point on the main frame of the product. In case the safety cable, enter in action, it needs to be replaced with a new one.
- Install the product only in well ventilated places.
- For non temporary installations, ensure that the fixture is securely fastened to a load-bearing surface with suitable corrosionresistant hardware.
- For a temporary installation with clamps, ensure that the quarter-turn fastener and/or screws are turned fully, and secured with a suitable safety cable.

Minimum distance of illuminated objects

- The projector needs to be positioned so that the objects hit by the beam of light are at least 0.5 meters (1.64 ft) from the lens of the projector.

T_a 45°C

Max operating ambient temperature (Ta)

- Do not operate the fixture if the ambient temperature (Ta) exceeds 45 °C (113 °F).

Protection from burns and fire

- The exterior of the fixture becomes hot during use. Avoid contact by persons and materials.
- Ensure that there is free and unobstructed airflow around the fixture.
- Keep flammable materials well away from the fixture
- Do not expose the front glass to sunlight or any other strong light source from any angle. Lenses can focus the sun's rays inside the fixture, creating a potential fire hazard.
- Do not attempt to bypass thermostatic switches or fuses.

Maintenance

- Warning! Disconnect the fixture from AC mains power and allow to cool for at least 10 minutes before handling.
- Only technicians who are authorized by PROLIGHTS or Authorised service partners are permitted to open the fixture.
- Users may carry out external cleaning, following the warnings and instructions provided, but any service operation not described in this manual must be referred to a qualified service technician.
- Important! Excessive dust, smoke fluid, and particle build up degrades performance, causes overheating and will damage the fixture. Damages caused by inadequate cleaning or maintenance is not covered by the product warranty.

Photobiological safety

- This device emits potentially dangerous optical radiation and is identified in the category of Risk Group 1 according to EN 62471.

Disposal

- This product is supplied in compliance with European Directive 2012/19/EU – Waste Electrical and Electronic Equipment (WEEE). To preserve the environment please dispose/ recycle this product at the end of its life according to the local regulation.

The products to which this manual refers comply with:

- 2014/35/EU - Safety of electrical equipment supplied at low voltage (LVD).
- 2014/53/EU - Radio Equipment Directive (RED).
- 2011/65/EU - Restriction of the use of certain hazardous substances (RoHS).

TÜVRheinland

C US

The products to which this manual refers comply with:

- UL 1573 + CSA C22.2 No. 166 - Stage and Studio Luminaires and Connector Strips.
- UL 1012 + CSA C22.2 No. 107.1 - Standard for power units other than class 2.

FCC Compliance:

- This device complies with Part 15 of the FCC Rules. Operation is subject to the following two conditions:

1. This device may not cause harmful interference, and
2. This device must accept any interference received, including interference that may cause undesired operation.

UK CA

Other approvals

- The product meets the safety requirements of the certification procedures of the market in which it is placed and sold.

Do not stare at the operating light source

- Do not look directly at the LED source during operation. It can be harmful to the eyes and skin.
- During Installation, operation and maintenance, be prepared for the fixture to light and move suddenly when connected to power.

ECLEXPOFL150FC - IP20 Version

Indoor use

- This product is designed for indoor and dry environments.
- Do not use in wet location and do not expose the fixture to rain or moisture.
- Never use the fixture in places subject to vibrations or bumps.
- Make certain that no inflammable liquids, water or metal objects enter the fixture.
- Excessive dust, smoke fluid, and particle build up degrades performance, causes overheating and will damage the fixture.
- Damages caused by inadequate cleaning or maintenance are not covered by the product warranty.

T_a-10°C

Minimum operating ambient temperature (Ta)

- Do not operate the fixture if the ambient temperature (Ta) is below -10 °C (14 °F).

T_c60°C

Temperature of the external surface

- The surface of the fixture can reach up to 60 °C (140 °F) during operation. Avoid contact with people and materials.

ECLEXPOFL300FC - IP20 Version

Indoor use

- This product is designed for indoor and dry environments.
- Do not use in wet location and do not expose the fixture to rain or moisture.
- Never use the fixture in places subject to vibrations or bumps.
- Make certain that no inflammable liquids, water or metal objects enter the fixture.
- Excessive dust, smoke fluid, and particle build up degrades performance, causes overheating and will damage the fixture.
- Damages caused by inadequate cleaning or maintenance are not covered by the product warranty.

T_a-10°C

Minimum operating ambient temperature (Ta)

- Do not operate the fixture if the ambient temperature (Ta) is below -10 °C (14 °F).

T_c80°C

Temperature of the external surface

- The surface of the fixture can reach up to 80 °C (176 °F) during operation. Avoid contact with people and materials.

ECLEXPOFL150IPFC - IP65 Version

IP65

Permanent Outdoor use

- This product is rated with an IP (Ingress protection) for permanent outdoor use when used and serviced according to the instruction contained in this document.
- Never use the fixture in places subject to vibrations or bumps.
- Make certain that no inflammable liquids, water or metal objects enter the fixture.
- Excessive dust, smoke fluid, and particle build up degrades performance, causes overheating and will damage the fixture.
- Damages caused by inadequate cleaning or maintenance are not covered by the product warranty.

T_a-20°C

Minimum operating ambient temperature (Ta)

- Do not operate the fixture if the ambient temperature (Ta) is below -20 °C (-4 °F).

T_c80°C

Temperature of the external surface

- The surface of the fixture can reach up to 80 °C (176 °F) during operation. Avoid contact with people and materials.

ECLEXPOFL300IPFC - IP65 Version

IP65

Permanent Outdoor use

- This product is rated with an IP (Ingress protection) for permanent outdoor use when used and serviced according to the instruction contained in this document.
- Never use the fixture in places subject to vibrations or bumps.
- Make certain that no inflammable liquids, water or metal objects enter the fixture.
- Excessive dust, smoke fluid, and particle build up degrades performance, causes overheating and will damage the fixture.
- Damages caused by inadequate cleaning or maintenance are not covered by the product warranty.

T_a-20°C

Minimum operating ambient temperature (Ta)

- Do not operate the fixture if the ambient temperature (Ta) is below -20 °C (-4 °F).

T_c80°C

Temperature of the external surface

- The surface of the fixture can reach up to 80 °C (176 °F) during operation. Avoid contact with people and materials.

1 - PACKAGING

PACKAGE CONTENT

- 1x ECLEXPOFL: 150FC / 150IPFC / 300FC / 300IPFC
- 1x 1,5 meters power cable (BARE END - 32A NEUTRIK POWERCON TRUE1 IP65).
- User Manual.

OPTIONAL ACCESSORIES

Check the updated accessories list, description and informations of the product at the following link:
ECLEXPOFL150FC: https://www.prolights.it/product/ECLEXPOFL150FC#accessories
ECLEXPOFL150IPFC: https://www.prolights.it/product/ECLEXPOFL150IPFC#accessories
ECLEXPOFL300FC: https://www.prolights.it/product/ECLEXPOFL300FC#accessories
ECLEXPOFL300IPFC: https://www.prolights.it/product/ECLEXPOFL300IPFC#accessories

2 - TECHNICAL DRAWING

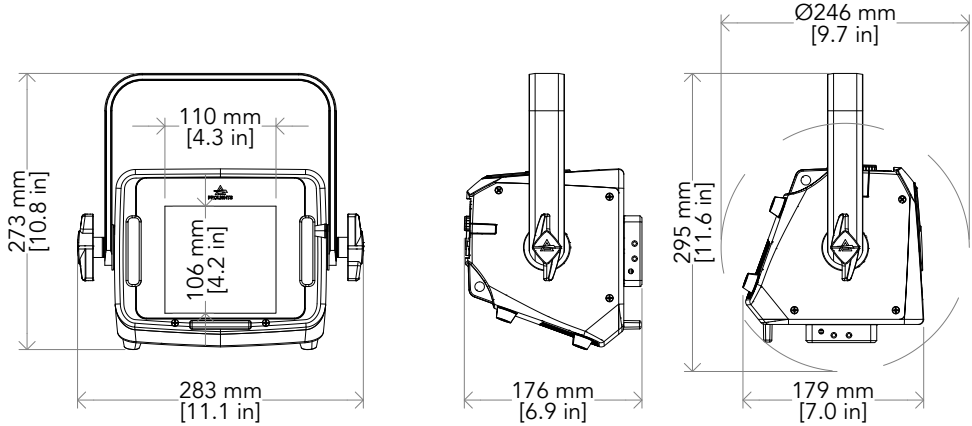

ECLEXPOFL150FC - Weight: 3,2 kg / 7,05 lbs

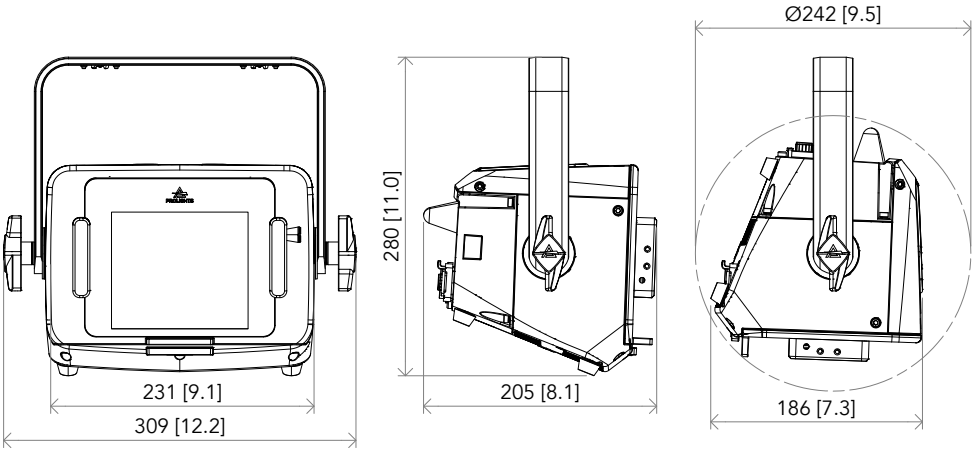

ECLEXPOFL150IPFC - Weight: 4,2 kg / 9,26 lbs

Fig. 01

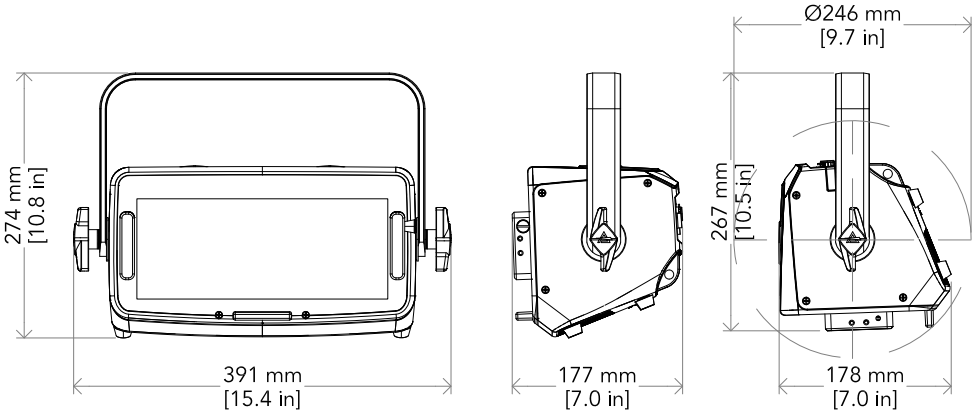

ECLEXPOFL300FC - Weight: 5,2 kg / 11,46 lbs

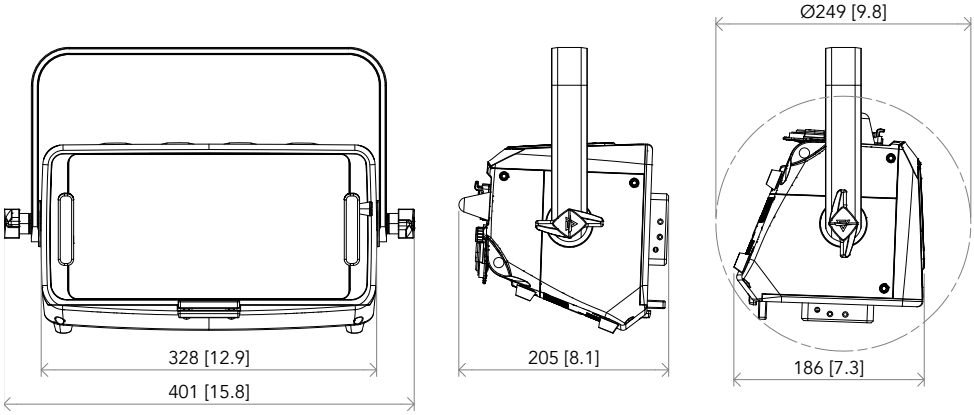

ECLEXPOFL300IPFC - Weight: 5,9 kg / 13,01 lbs

Fig. 02

3 - INSTALLATION

MOUNTING

Check that the supporting structure can safely bear the weight of all installed fixtures, clamps, cables, auxiliary equipment, etc. and complies with locally applicable regulations.
When suspending the fixture above ground level, secure it against failure of primary attachments by attaching a safety wire that is approved as a safety attachment for the weight of the fixture to an anchor point on the product main frame.
Do not use removable parts or weak anchors for secondary attachment.
Warning! When clamping the fixture to a truss or other structure at any angle, use clamps of half-coupler type. Do not use any type of clamp that does not completely encircle the structure when fastened.

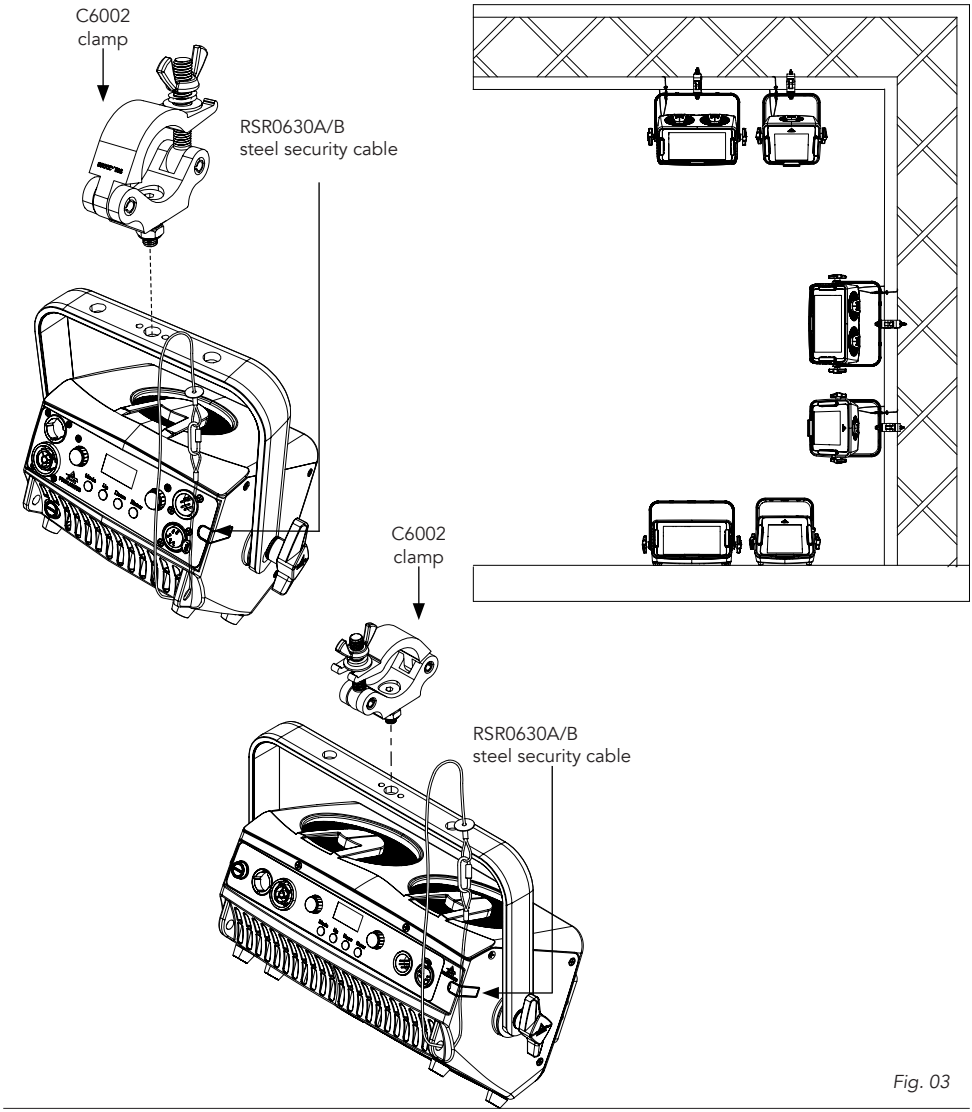

Fig. 03

4 - CONNECTION TO THE MAINS SUPPLY

WARNING: For protection from electric shock, the fixture must be earthed!
The product is equipped with auto-switching power supply that automatically adjusts to any 50-60Hz AC power source from 100-240 Volts.
If you need to install a power plug on the power cable to allow connection to power outlets, install a grounding-type (earthed) plug, following the plug manufacturer's instructions. If you have any doubts about proper installation, consult a qualified electrician.
The max power consumption is: 175W (150 FC), 310W (300 FC).

Core (EU)	Core (US)	Connection	Plug terminal marking
Brown	Black	Live	L
Blue	White	Neutral	N
Yellow+green	Green	Earth	⏚

5 - START UP

CONNECT AND DISCONNECT POWER FROM THE PRODUCT

To apply and disconnect power to the product:

- Check that the product is installed and secured as indicated in the Safety Informations, and that personal safety will not be put at risk when the fixture lights up.
- Connect the power connector into the Mains input socket (100-240 VAC-50/60 Hz).
- The product is then ready for its operations and can be controlled through the available input signals on board.
- To disconnect power from the product, disconnect the Mains from the socket.

6 - PRODUCT OVERVIEW

1. BRACKET.
2. KNOB for bracket.
3. POWER IN: for connection to the Mains 100-240V~/50-60Hz.
4. POWER OUT: power output for connection of multiple units in series.
5. MAIN FUSE HOLDER (IP20): replace a burnt-out fuse by one of the same type only (T5A 250V).
6. ROTATORY KNOBS for product stand alone control operations.
7. USER INTERFACE with display and buttons for access to the control panel functions.
8. DMX IN (5-p XLR): 1 = GND, 2 = sign-, 3 = sign+, 4 N/C, 5 N/C.
9. DMX OUT (5-p XLR): 1 = GND, 2 = sign-, 3 = sign+, 4 N/C, 5 N/C.
10. ANTENNA of Wireless DMX Receiver internal module.
11. GORE VALVE (IP65).

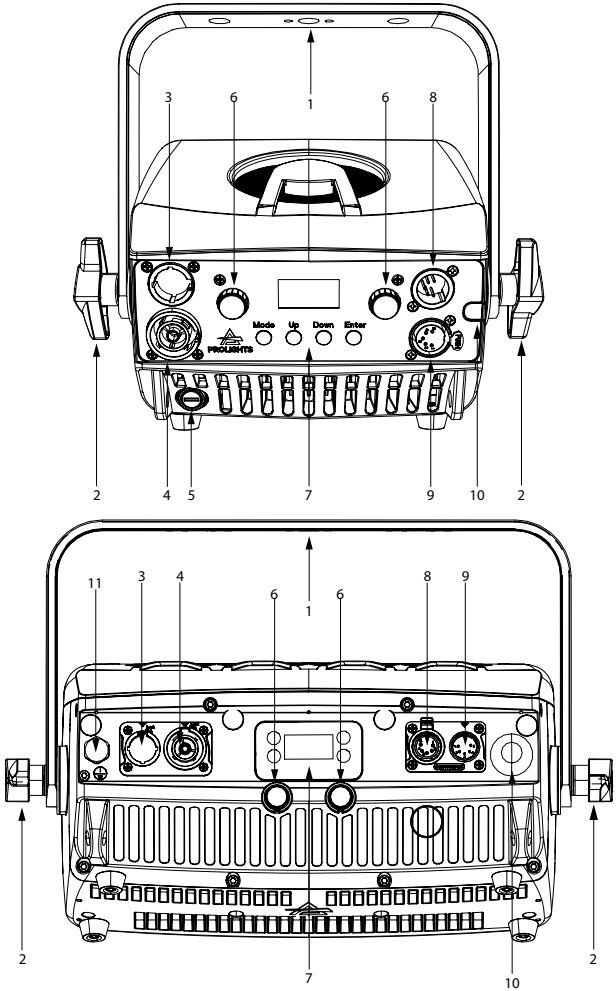

Fig. 04

7 - DMX CONNECTION

CONNECTION OF THE CONTROL SIGNAL: DMX LINE

DMX - INPUT
XLR plug

Pin1 : GND - Shield
Pin2 : - Signal
Pin3 : + Signal
Pin4 : N/C
Pin5 : N/C

DMX - OUTPUT
XLR socket

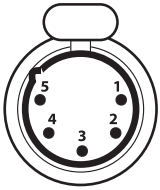

Fig. 05

The product has XLR sockets for DMX input and output.
The default pin-out on both socket is as the following diagram:

INSTRUCTIONS FOR A RELIABLE DMX CONNECTION

Use shielded twisted-pair cable designed for RS-485 devices: standard microphone cable cannot transmit control data reliably over long runs. 24 AWG cable is suitable for runs up to 300 meters (1000 ft). Heavier gauge cable and/or an amplifier is recommended for longer runs.
To split the data link into branches, use splitter-amplifiers in the connection line.
Do not overload the link. Up to 32 devices may be connected on a serial link.

CONNECTION DAISY CHAIN

Connect the DMX data output from the DMX source to the product DMX input (male connector XLR) socket.
Run the data link from the product XLR output (female connector XLR) socket to the DMX input of the next fixture.
Terminate the data link by connecting a 120 Ohm signal termination. If a splitter is used, terminate each branch of the link.
Install a DMX termination plug on the last fixture on the link.

CONNECTION OF THE DMX LINE

DMX connection employs standard XLR connectors. Use shielded pair-twisted cables with 120Ω impedance and low capacity.
The following diagram shows the connection mode:

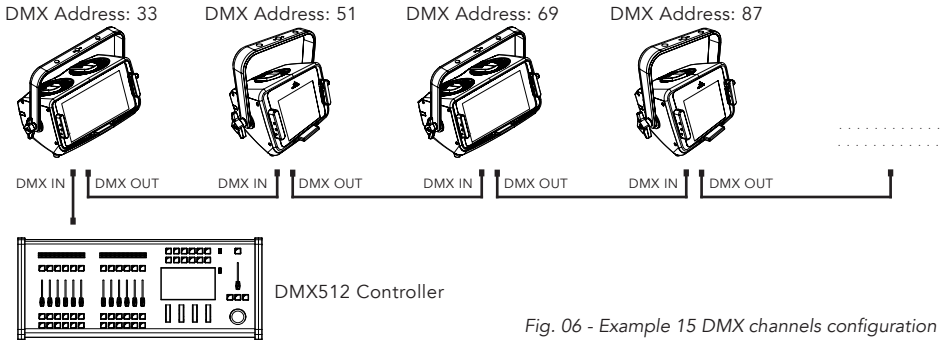

Fig. 06 - Example 15 DMX channels configuration

CONSTRUCTION OF THE DMX TERMINATION

The termination is prepared by soldering a 120Ω 1/4 W resistor between pins 2 and 3 of the male XLR connector, as shown in figure.

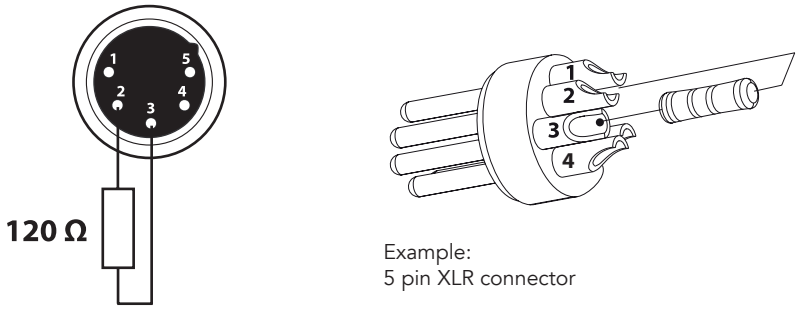

Example:
5 pin XLR connector

Fig. 07

DMX ADDRESSING

In order to start controlling the product via DMX, the first step is to select a DMX address, also known as the start channel, this is the first channel used to receive instructions from a DMX controller. If you wish to control the product individually, it is necessary to assign a different starting address channel to each fixture.
The number of channels occupied from the product depends on the DMX mode selected, so always verify the DMX Mode in the MENU before start addressing.
If you assign two fixtures the same address, they will be executing the same behaviour. Selecting the same address to multiple fixtures can be useful for diagnostic purposes and symmetrical control.
DMX addressing is limited to make it impossible to set the DMX address so high that you are left without enough control channels for the product.
To set the fixture's DMX address:

1. Press MENU to open the main menu.
2. Reach the addressing menu, then select the DMX ADDRESS settings.
3. Select the address from 1 to 512 using the navigation arrows/buttons and confirm by pressing ENTER.
4. Press Menu to exit and return to the Home screen.

OPERATION AS A WIRELESS TRANSMITTER

ECLEXPOFLOOD can be used as wireless trasmitter for transmitt at different wireless receivers DMX signal. To use ECLEXPOFLOOD as wireless transmitter, please follow the procedure below:

1. Push MENU button untill you show CONNECT on display, then press ENTER button to confirm.
2. Use UP/DOWN buttons for select Wireless, then press ENTER to confirm.
3. Push ENTER button on WDMX ON/OFF function and enable it to ON.
4. Select WDMX mode and set it on Transmitter (please note that WDMX mode will be available only if WDMX ON/OFF is set to ON).
5. Ensure that the receiver units are not connected to any other transmitter. Please refer to "Reset the receiver" paragraph.
6. Enable TX LINK to ON to link transmitter to receivers (please note that TX LINK will be avaible only if WDMX mode is set to Transmitter).

- The transmitter scans for all unlinked receivers for a period of about 5 seconds.
- If the connection fails, check the position of the receiver.
- The wireless icon on the receiver display indicates the received signal strength.

UNLINKING THE TRANSMITTER

Follow the procedure below to unlink the transmitter from all receivers connected with the unit.
1. Push MENU button untill you show CONNECT on display, then press ENTER button to confirm.
2. Use UP/DOWN buttons for select Wireless, then press ENTER to confirm.
3. Enable TX UNLINK to ON 8 (please note that TX UNLINK will be avaible only if WDMX mode is set to Transmitter).

- All connected receivers will be unlinked.

DMX TO WDMX (TX)

This function enable or disable the transmission throught wireless of the DMX signal from the transmitter side to the receiver.

OPERATION AS A WIRELESS RECEIVER

ECLEXPOFLOOD can be used as wireless receiver connected to a wireless transmitter.
To use ECLEXPOFLOOD as wireless receiver, please follow the procedure below:
1. Push MENU button untill you show CONNECT on display, then press ENTER button to confirm.
2. Use UP/DOWN buttons for select Wireless, then press ENTER to confirm.
3. Push ENTER button on WDMX ON/OFF function and enable it to ON.
4. Select WDMX mode and set it on Receiver (please note that WDMX mode will be available only if WDMX ON/OFF is set to ON).
5. Enable RX RESET to ON to reset the receiver (please note that RX RESET will be avaible only if WDMX mode is set to Receiver).
6. On the transmitter, enable TX LINK to ON to link transmitter to the receivers.
7. If the connection is successful and DMX input is available the display the display on the receiver unit will shows the DMX address. If DMX signal is not available, the display will shows "No signal" but keeps the transmitter linked.
8. If the connection fails, check the position of the receiver.
9. The wireless icon on the receiver display indicates the received signal strength.

RESET THE RECEIVER

Follow the procedure below to reset the receiver.
1. Push MENU button untill you show CONNECT on display, then press ENTER button to confirm.
2. Use UP/DOWN buttons for select Wireless, then press ENTER to confirm.
3. Enable RX RESET to ON.

- The wireless icon on the receiver display indicates the received signal strength.

WDMX TO DMX (RX)

This function enable or disable the retransmission of the wireless DMX signal received throught the DMX port on the receiver side.

8 - CONTROL PANEL

The product has a display, buttons and pushable encoders for access to the control panel functions.
NOTE: IP20 and IP65 version have different User Interface layout, but they works in the same way.

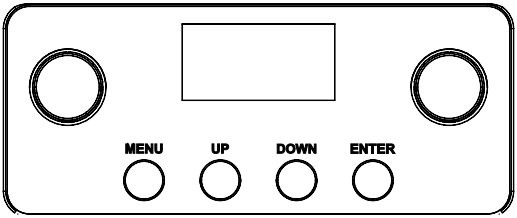

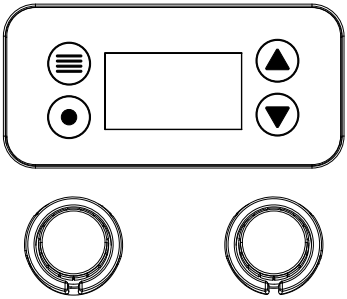

Fig. 08

DISPLAY AND BUTTONS LAYOUT

The product has a display and buttons for access to the control panel functions:

	MENU - Used to access the menu tree and to return to the upper level. Hold to go back to the home screen.
	UP - Browse upwards through the menu list and increases the numeric value displayed.
	DOWN - Browse downwards through the menu list and decreases the numeric value displayed.
	ENTER - Used to confirm the displayed value, or activate the displayed function.
	ROTARY KNOBS - Used for Stand Alone purposes and scroll throw the menu.

SHORTCUTS

Keys	Mode	Description
UP + DOWN after power on	Flip Display	Directly flip display without enter inside menu
ENTER	Home screen (Keep 3 sec)	Stand Alone menu
DOWN for 3s	Home screen (Keep 3 sec)	Factory Reload

9 - MENU STRUCTURE

The following chart describes the MENU tree of the product, the terms shown in **BOLD** indicate the default settings. Functionalities with the "(WIP)" description are still under development.

MENU: CONNECT

LEVEL 1	LEVEL 2	LEVEL 3	LEVEL 4	LEVEL 5	DESCRIPTION
DMX ADDRESS	**1**-512				*Set DMX Address*
DMX MODE	UNO DUO	COLOR TEMPERATURE	2700K		*Set DMX Mode* *For Uno and Duo mode selection of CCT, Color Macro or Manual color is available.*
			2800K		
			3200K		
			3500K		
			4000K		
			4500K		
			5000K		
			5600K		
			6000K		
			6500K		
			7000K		
			8000K		
			9000K		
			10000K		
		COLOR MACRO	SEE TABLE OF COLOR MACRO		
		MANUAL COLORS	RED	000 - **255**	
			GREEN		
			BLUE		
			WARM WHITE		
	BASIC				
	BASIC 16BIT				
	STANDARD				
	EXTENDED				
	ADVANCED				
WIRELESS	WDMX ON/OFF	ON	This section is related to IP20 versions with onboard installed wireless kit. If the wireless kit is not installed this section is hidden.		*Enable/Disable the wireless card.*
		OFF			
	WDMX MODE	TRANSMITTER			*Choose whether to set the wireless card as Transmitter or Receiver.* *WDMX mode is unlocked only if WDMX ON / OFF is ON.*
		RECEIVER			
	TX LINK	ON			*TX link unlock when the unit is set as a transmitter.*
		OFF			
	TX UNLINK	ON			*Disconnect the transmitter from all receivers.* *TX unlink unlocks only if WDMX mode is on transmitter.*
		OFF			
	RX RESET	ON			*Total reset of the receiver.* *RX reset unlocks only if WDMX mode is receiver.*
		OFF			
	DMX TO WDMX (TX)	ON			*Enable/Disable the transmission of the dmx from the transmitter to the receiver via wdmx.*
		OFF			
	WDMX TO DMX (RX)	**ON**			*Enable/Disable the retransmission of the DMX from the receiver to the other units connected by cable to the receiver itself.*
		OFF			

MENU: CONNECT

LEVEL 1	LEVEL 2	LEVEL 3	LEVEL 4	LEVEL 5	DESCRIPTION
WIRELESS	CRMX ON/OFF	ON	This section is related to IP65 versions		*Enable/Disable the wireless card.*
		OFF			
	CRMX MODE	TX CRMX			*Choose whether to set the wireless card as Transmitter or Receiver.* *For Transmitter mode you can also select which protocol to transmit.* *CRMX mode is unlocked only if CRMX ON / OFF is ON.*
		TX G4S			
		TX G3			
		RX			
	TX LINK	ON			*TX link unlock when the unit is set as a transmitter.*
		OFF			
	TX UNLINK	ON			*Disconnect the transmitter from all receivers. TX unlink unlocks only if CRMX mode is on transmitter.*
		OFF			
	RX RESET	ON			*Disconnect the transmitter from all receivers.* *TX unlink unlocks only if CRMX mode is on transmitter*
		OFF			
	IN TO CRMX (TX)	**ON**			*Enable/Disable the transmission of the DMX from the* *transmitter to the receiver via CRMX.*
		OFF			
	CRMX TO DMX (RX)	**ON**			*Enable/Disable the retransmission of the DMX from the* *receiver to the other units connected by cable to the receiver itself.*
		OFF			
	LINKING KEY	When In RX Mode: 1. Insert 8 digit code 2. Ask for mode (CRMX or CRMX²) 3. Ask for universe (CRMX: A,C,E,G | CRMX²: A,B,C,D,E,F,G,H) When in TX CRMX Mode: 1. Insert 8 digit code			*Linking key can be used as a simple way to link receivers to a transmitter without the need to initiate the linking process on the transmitter. This allows the user to just enter the code into the receiver and it will be linked to the transmitter with the same code.*
	UNIVERSE METADATA	In RX Mode: 1. RGB Color code received from TX 2. Universe name received from TX In TX CRMX Mode: 1.RGB Color code set from R,G,B combo list 2. Universe name by default takes first 16 characters of Model Name.			*CRMX transmitters may transmit some universe metadata information used to identify the received universe on the receiver side. These are;* *Universe name: A 16 character string with a human readable name identifying the universe.* *Universe color: RGB code for an LED that can easily be used to visually identify the universe by color.*

MENU: SETUP

LEVEL 1	LEVEL 2	LEVEL 3	LEVEL 4	LEVEL 5	DESCRIPTION
SCREEN	BACKLIGHT	ON			*Select the timing after that display will switch automatically off when unactive.*
		10S			
		20S			
		30S			
	FLIP DISPLAY	ON			*Allows you to rotate the display by 180°*
		OFF			
	KEY LOCK	ON			*Lock the buttons on the control panel by a password.* *Press following combinations (password) in order to access to the user menu : UP, DOWN, UP, DOWN, ENTER*
		OFF			
	TEMPERATURE UNIT	**°C**			*Choose Temperature unit.*
		°F			
TRANSFER CONFIG	WITHOUT DMX ADDRESS				*Transfer settings from current fixture to other fixture of the same model using DMX Protocol. If there is signal coming from other source Transfer Configuration it's not available.*
	WITH DMX ADDRESS				

MENU: ADVANCED

LEVEL 1	LEVEL 2	LEVEL 3	LEVEL 4	LEVEL 5	DESCRIPTION
DIMMER CURVE	LINEAR				*Set Dimmer Curve for Main Dimmer function.*
	S-CURVE				
	SQUARE LAW				
	INVERSE SQUARE LAW				
	HIG RES @LOW*				**Only ECLEXPOFL300 FC / IPFC*
DIMMER SPEED	**AUTO**				*Set Dimmer Speed. This parameter defines interpolation of DMX Changes for main functions. Off turns off interpolation.*
	FAST				
	MEDIUM				
	SLOW				
	OFF				
SPEKTRA CALIBRATION	ON				*ON: CCT and colors are fully calibrated, working in the common color space definition set by Spektra. This means that output of multiple fixtures will match with no visible differences. Color Saturation is slightly reduced. PURE COLORS: CCT is calibrated, giving perfect white matching across multiple fixtures, but primary and secondary colors are calibrated to their native color space which allows maximum color saturation. The closer you move towards white, the more closely multiple fixtures will match each other's output. The further you move away from white and the closer you move towards saturated color, the less closely multiple fixtures will match each other's output. OFF: CCT doesn't guarantee High CRI Values and color output of one fixture may or may not closely match that of other fixtures.*
	PURE COLORS				
	OFF				
LED MODE	**HIGH QUALITY**				*High Quality - CRI Target > 93 High Brightness - CRI Target 85*
	HIGH BRIGHTNESS				
LED FREQUENCY	600HZ	6000HZ			*Select PWM frequency. NOTE: Using higher LED Frequency color accuracy may be slightly compromised at low level of dimmer.*
	1200HZ	25KHZ			
	2000HZ	36KHZ			
	4000HZ	40KHZ			
DMX FAULT	BLACKOUT				*Select behaviour in case of Signal fault.*
	HOLD				
	STAND ALONE				
FAN MODE	**AUTO**				*Select the fan speed.*
	HIGH				
	SILENT				
	OFF				
TUNGSTEN EMULATION	ON				*Toggle Tungsten Emulation.*
	OFF				
OUTPUT CONTROL	CONSTANT				*Select the Output control.*
	DYNAMIC				
FACTORY RELOAD	ON				*Factory Reload to bring back all default values and settings.*
	OFF				

MENU: INFORMATIONS

LEVEL 1	LEVEL 2	LEVEL 3	LEVEL 4	LEVEL 5	DESCRIPTION
DEVICE TIME	FIXTURE HOURS	<99999H>			*View informations about product operating lifetime. Fixture Hours is countered based on general operation time. Hours are countered since Power is plugged in. Source Hours is countered based on LED Activity time.*
	CURRENT HOURS	<99999H>			
	SOURCE HOURS	<99999H>			
	AC POWER ON CYCLE	<99999H>			
	MAINTENANCE TIME	ELAPSED TIME			
		ALERT PERIOD	10 - 1000		
POWER CONS.	** W				*Show estimated power consumption.*
TEMPERATURE	NEAR SOURCE TEMP, DRIVER PCB TEMP, LED PCB TEMP,…				*Show all NTC temperatures.*
WIRELESS QUALITY	** %				*Show Wireless quality by percentage.*
FAN SPEED					*Show the speed of the fans.*
CHANNEL VALUE					*Show all Channel values as a list, value shown depends on DMX Mode*
ERROR MESSAGE					*Show error message*
FIXTURE MODEL	< - >				*Show RDM fixture model*
DEVICE LABEL	<RDM LABEL>				*Show RDM Label.*
CALIBRATION	MASTER				*Show calibration state.*
SOFTWARE VERSION	"<V1.0>"				*Show firmware version of the fixture*
CRMX MODULE VERSION	TimoFX: Vx.x.xx				*Show firmware version of TimoFX module.*
RDM UID	15D00228****				*Show RDM UID of the fixture.*

MENU: STAND ALONE

LEVEL 1	LEVEL 2	LEVEL 3	LEVEL 4	LEVEL 5	DESCRIPTION
MASTER/SLAVE	MASTER DMX				*Allow you to link and operating in synk multiple units without a DMX console. Choose a unit to perform as the Master. Master No DMX: fixture is not broadcasting signal.*
	MASTER NO DMX				
	SLAVE				
EFFECTS	EFFECT 1 to 5	DIMMER	<1-100>		*Effects modes allows creation and editing of 5 effects maximum. Each effect contains up to 20 colors, a Main Dimmer and a Main Strobe. COLOR section: SWITCH is used to toggle On/Off the color in the sequence. DIMMER is used to individually DIM the selected color. STROBE is used to individually STROBE the selected color. HOLD TIME defines how long the color is hold on the output. FADE IN/OUT TIME defines the timings of fading in/out. All Time parameters have 0.5s steps. The effects can be considered as CHASE, once last color has finished playing the sequence will start again*
		STROBE	<1-100>		
		COLOR 1	SWITCH	ON - OFF	
			DIMMER		
			STROBE		
			HOLD TIME	0 - 360s	
			FADE IN TIME	0 - 60s	
			FADE OUT TIME	0 - 60s	
			SAME STRUCTURE OF STATIC IN STAND ALONE		
		…	…		
		COLOR 20	SWITCH	ON - OFF	
			DIMMER		
			STROBE		
			HOLD TIME	0 - 360s	
			FADE IN TIME	0 - 60s	
			FADE OUT TIME	0 - 60s	
			SAME STRUCTURE OF STATIC IN STAND ALONE		
CCT	2800K to 10000K				*Linear CCT.*
FIXED COLORS	R	DIMMER 000 - **255**			
	G				
	B				
	W				
	RG				
	RB				
	RW				
	GB				
	GW				
	BW				
	RGB				
	RGW				
	RBW				
	GBW				
	RGBW				
	COLOR MACRO	SEE TABLE OF COLOR MACRO	DIMMER 000 - 255		

MENU: STAND ALONE

LEVEL 1	LEVEL 2	LEVEL 3	LEVEL 4	LEVEL 5	DESCRIPTION
WHITE PRESETS	2700K	DIMMER: 000 - **255**			
	2800K				
	3000K				
	3200K				
	3500K				
	4000K				
	4500K				
	5000K				
	5600K				
	6000K				
	6500K				
	7000K				
	8000K				
	9000K				
	10000K				
MANUAL COLORS	RED	000 - **255**			
	GREEN	000 - **255**			
	BLUE	000 - **255**			
	WARM WHITE	000 - **255**			

MASTER/SLAVE

The MASTER/SLAVE function enables the fixture to operate in standalone mode, where it must be set to MASTER. When configured correctly, this allows one fixture to control multiple fixtures in a daisy chain setup, ensuring synchronized operation. Below are the available modes:

- **MASTER DMX -** The fixture operates as the master, with standalone mode active, and transmits the same standalone functionality via DMX to other fixtures in the daisy chain.

- **MASTER NO DMX -** The device works as master but does not transmit the DMX signal to the other devices connected in the daisy chain.

- **SLAVE -** The fixture remains in standby, waiting to receive a signal from another device set to MASTER DMX. If a standalone mode is selected on the fixture, it will automatically switch to MASTER NO DMX.saved presets or factory settings.

DIMMER CURVES

Five dimming modes are available:

1. **LINEAR** - Light intensity increases proportionally to the DMX value, creating a linear perception.
2. **S-CURVE** - Light intensity is finer at low and high levels, with coarser control at mid-levels.
3. **SQUARE LAW** - Light intensity is finer at low levels and becomes coarser at higher levels.
4. **INVERSE SQUARE LAW** - Light intensity is coarser at low levels and finer at higher levels.
5. **HIGHRES@LOW** - Provides very fine control at low light intensities, with coarser control at medium and high levels. (Only for ECLEXPOFL300FC / ECLEXPOFL300IPFC)

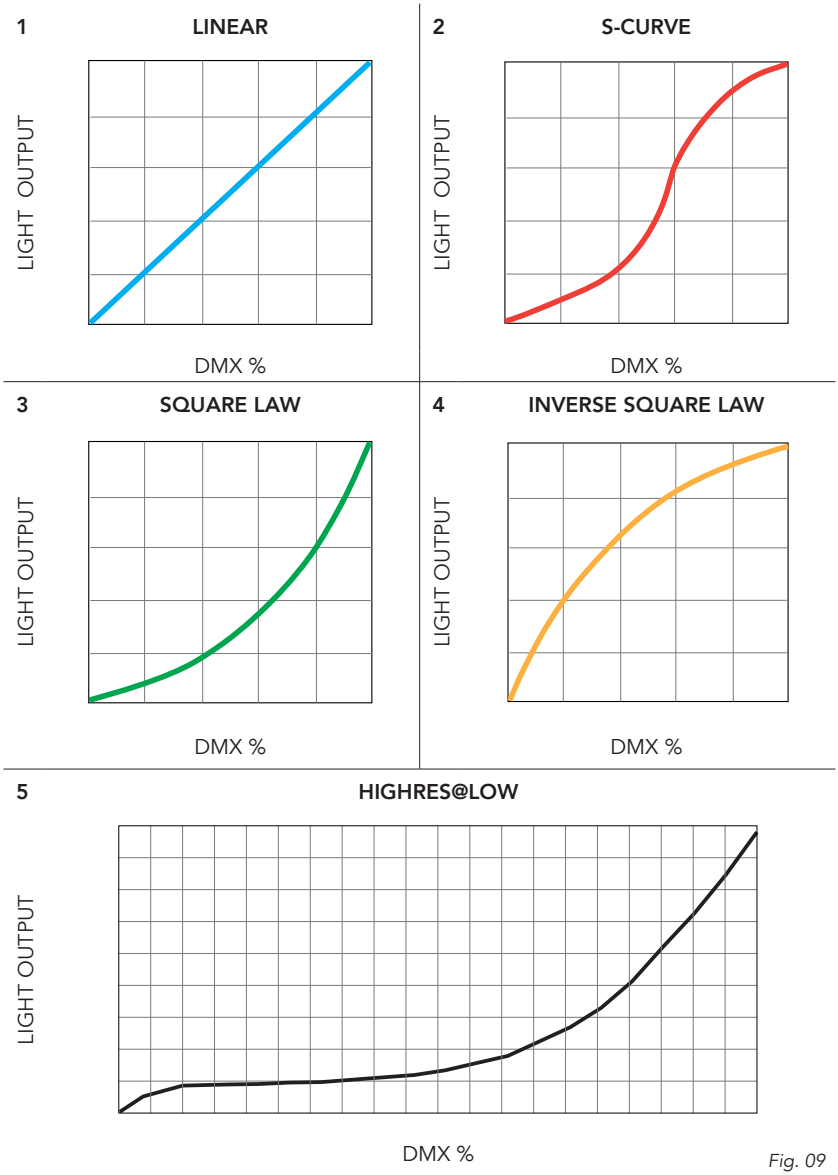

Fig. 09

DIMMER SPEEDS

Five dimming speeds are available:

1. **AUTO** - When the DMX value changes by more than 50 DMX values, the intensity will instantly adjust to the new value. For changes less than 50 DMX values, the fast dimming curve will be applied.
2. **FAST** - Indicates the fast speed dimming curve. Refer to the diagram for reference.
3. **MEDIUM** - Indicates the medium speed dimming curve. Refer to the diagram for reference.
4. **SLOW** - Indicates the slow dimming curve. Refer to the diagram for reference.
5. **OFF** - The intensity will immediately adjust to the new value (essentially no delay effect).

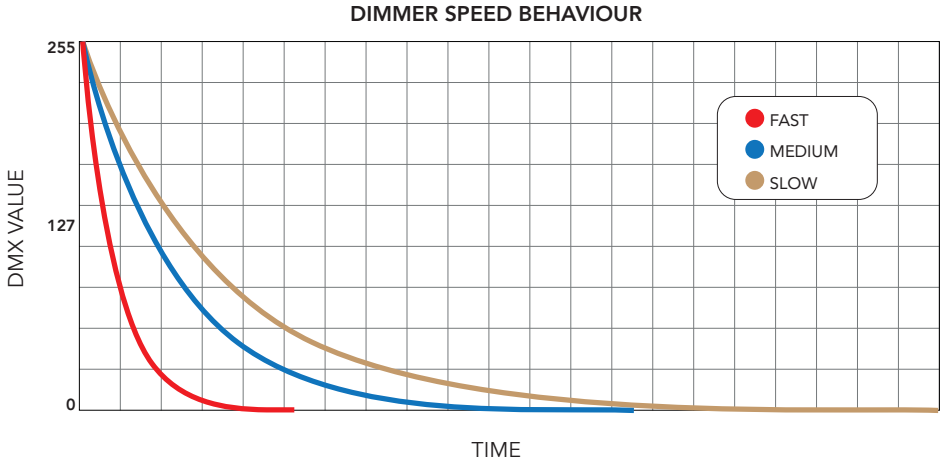

Fig. 10

USER SETTINGS

This function allows the fixture to store and manage custom settings, which are saved as user presets. Factory default settings will not overwrite these saved presets, preserving each user's configuration.

- **SAVE -** Available when a preset slot is empty, enabling users to save the current fixture settings into that slot. Up to five presets can be saved for quick recall of different configurations.

- **RECALL -** Loads the settings stored in a selected preset slot, applying them to the fixture and making it easy to switch between saved configurations as needed.

- **DELETE -** Clears the selected preset slot, freeing it up for a new save. Deleting a preset does not impact any other saved presets or factory settings.

10 - DMX CHARTS

RDM Model ID	
ECLEXPOFL150FC	0xD129
ECLEXPOFL150IPFC	0xD176
ECLEXPOFL300FC	0xD127
ECLEXPOFL300IPFC	0xD178

RDM Personality ID List

ID	DMX Mode	Footprint
1	UNO	1CH
2	DUO	2CH
3	BASIC	5CH
5	BASIC 16BIT	10CH
6	STANDARD	9CH
7	EXTENDED	12CH
8	ADVANCED	18CH

DMX MODES

PARAMETER	UNO	DUO	BASIC	BASIC 16BIT	STD	EXT	ADV
DIMMER	1	1	1	1	1	1	1
DIMMER FINE	-	2	-	2	2	2	2
CCT	-	-	-	-	-	3	3
CCT FINE	-	-	-	-	-	-	4
TINT	-	-	-	-	-	4	5
CROSSFADE	-	-	-	-	-	5	6
RED	-	-	2	3	3	6	7
RED FINE	-	-	-	4	-	-	8
GREEN	-	-	3	5	4	7	9
GREEN FINE	-	-	-	6	-	-	10
BLUE	-	-	4	7	5	8	11
BLUE FINE	-	-	-	8	-	-	12
WHITE	-	-	5	9	6	9	13
WHITE FINE	-	-	-	10	-	-	14
COLOR MACRO	-	-	-	-	7	10	15
CTO ON COLORS	-	-	-	-	-	-	16
STROBE	-	-	-	-	8	11	17
CONTROL	-	-	-	-	9	12	18

CHANNEL DEFINITION

Dimmer

Function	8 bit value		16 bit value		Note
	From	To	From	To	
Dimmer	0	255	0	65535	Default @ 0 (Linear Dimmer 0 - 100%)

CCT (2800K - 10000K)

Function		8 bit value		16 bit value		Note
CCT(K) From	CCT(K) To	From	To	From	To	
2800	2900	0	4	0	910	Default @ 0
2900	3000	4	7	910	1820	
3000	3100	7	11	1820	2731	
3100	3200	11	14	2731	3641	
3200	3300	14	18	3641	4551	
3300	3400	18	21	4551	5461	
3400	3500	21	25	5461	6371	
3500	3600	25	28	6371	7282	
3600	3700	28	32	7282	8192	
3700	3800	32	35	8192	9102	
3800	3900	35	39	9102	10012	
3900	4000	39	43	10012	10923	
4000	4100	43	46	10923	11833	
4100	4200	46	50	11833	12743	
4200	4300	50	53	12743	13653	
4300	4400	53	57	13653	14563	
4400	4500	57	60	14563	15474	
4500	4600	60	64	15474	16384	
4600	4700	64	67	16384	17294	
4700	4800	67	71	17294	18204	
4800	4900	71	74	18204	19114	
4900	5000	74	78	19114	20025	
5000	5100	78	81	20025	20935	
5100	5200	81	85	20935	21845	
5200	5300	85	89	21845	22755	
5300	5400	89	92	22755	23665	
5400	5500	92	96	23665	24576	
5500	5600	96	99	24576	25486	
5600	5700	99	103	25486	26396	
5700	5800	103	106	26396	27306	
5800	5900	106	110	27306	28216	
5900	6000	110	113	28216	29127	
6000	6100	113	117	29127	30037	
6100	6200	117	120	30037	30947	
6200	6300	120	124	30947	31857	
6300	6400	124	128	31857	32768	
6400	6500	128	131	32768	33678	
6500	6600	131	135	33678	34588	
6600	6700	135	138	34588	35498	

CCT (2800K - 10000K)

Function		8 bit value		16 bit value		Note
CCT(K) From	CCT(K) To	From	To	From	To	
6700	6800	138	142	35498	36408	
6800	6900	142	145	36408	37319	
6900	7000	145	149	37319	38229	
7000	7100	149	152	38229	39139	
7100	7200	152	156	39139	40049	
7200	7300	156	159	40049	40959	
7300	7400	159	163	40959	41870	
7400	7500	163	166	41870	42780	
7500	7600	166	170	42780	43690	
7600	7700	170	174	43690	44600	
7700	7800	174	177	44600	45510	
7800	7900	177	181	45510	46421	
7900	8000	181	184	46421	47331	
8000	8100	184	188	47331	48241	
8100	8200	188	191	48241	49151	
8200	8300	191	195	49151	50061	
8300	8400	195	198	50061	50972	
8400	8500	198	202	50972	51882	
8500	8600	202	205	51882	52792	
8600	8700	205	209	52792	53702	
8700	8800	209	213	53702	54613	
8800	8900	213	216	54613	55523	
8900	9000	216	220	55523	56433	
9000	9100	220	223	56433	57343	
9100	9200	223	227	57343	58253	
9200	9300	227	230	58253	59164	
9300	9400	230	234	59164	60074	
9400	9500	234	237	60074	60984	
9500	9600	237	241	60984	61894	
9600	9700	241	244	61894	62804	
9700	9800	244	248	62804	63715	
9800	9900	248	251	63715	64625	
9900	10000	251	255	64625	65535	

TINT

Function	8 bit value		16 bit value		Note
	From	To	From	To	
-25% to 0	0	127	-	-	Default @ 128 Linear tint correction from -0.25 to +0.25
Neutral	128	128	-	-	
0 to 25%	129	255	-	-	

Crossfade from CCT to Color

Function	8 bit value		16 bit value		Note
	From	To	From	To	
Linear Crossfade	0	255	0	65535	Default @ 255

Colors (RED - GREEN - BLUE - WHITE)

Function	8 bit value		16 bit value		Note
	From	To	From	To	
Color	0	255	0	65535	Default @ 255 Linear 0 - 100%

Color Macro

Function	8 bit value		16 bit value		Note
	From	To	From	To	
No Function	0	1	-	-	Default @ 0
Red	2	3	-	-	
Green	4	5	-	-	
Blue	6	7	-	-	
Cyan	8	9	-	-	
Magenta	10	11	-	-	
Yellow	12	13	-	-	
Dirty White	14	15	-	-	
Alice Bllue	16	17	-	-	
Congo Blue	18	19	-	-	
Dark Steel Blue	20	21	-	-	
Deep Lavender	22	23	-	-	
Lilac Tint	24	25	-	-	
Daylight Blue	26	27	-	-	
Flame Red	28	29	-	-	
Bastard Amber	30	31	-	-	
Deep Orange	32	33	-	-	
Pale Gold	34	35	-	-	
Apricot	36	37	-	-	
Bright Blue	38	39	-	-	
Primary Green	40	41	-	-	
Special Lavender	42	43	-	-	
Pale Lavender	44	45	-	-	
Deep Golden Amber	46	47	-	-	
Medium Blue	48	49	-	-	
Bright Pink	50	51	-	-	
Mauve	52	53	-	-	
Dark Green	54	55	-	-	
Lee Green	56	57	-	-	
Dark Blue	58	59	-	-	
Light Blue	60	61	-	-	
Steel Blue	62	63	-	-	
Medium Blue-Green	64	65	-	-	
Peacock Blue	66	67	-	-	
Magenta	68	69	-	-	
Dark Pink	70	71	-	-	
Middle Rose	72	73	-	-	
Light Salmon	74	75	-	-	
English Rose	76	77	-	-	
Light Rose	78	79	-	-	
Orange	80	81	-	-	
Deep Amber	82	83	-	-	
Straw	84	85	-	-	
Light Amber	86	87	-	-	

Color Macro

Function	8 bit value		16 bit value		Note
	From	To	From	To	
Spring Yellow	88	89	-	-	
Dark Yellow Green	90	91	-	-	
Just Blue	92	93	-	-	
Sky Blue	94	95	-	-	
Lavender	96	97	-	-	
Light Lavender	98	99	-	-	
Pink Carnation	100	101	-	-	
Medium Pink	102	103	-	-	
Light Pink	104	105	-	-	
Sunset Red	106	107	-	-	
Dark Amber	108	109	-	-	
Gold Amber	110	111	-	-	
Medium Amber	112	113	-	-	
Fire	114	115	-	-	
Surprise Peach	116	117	-	-	
Straw Tint	118	119	-	-	
Medium Yellow	120	121	-	-	
Lee Minus Green	122	123	-	-	
Pale Gold	124	125	-	-	
Orange	126	127	-	-	
Deep Straw	128	129	-	-	
Rose Purple	130	131	-	-	
Deep Purple	132	133	-	-	
Soft Green	134	135	-	-	
Reserved	136	209	-	-	
2700K	210	211	-	-	
2800K	212	213	-	-	
3000K	214	215	-	-	
3200K	216	217	-	-	
3400K	218	219	-	-	
3600K	220	221	-	-	
3800K	222	223	-	-	
4000K	224	225	-	-	
4200K	226	227	-	-	
4400K	228	229	-	-	
4600K	230	231	-	-	
4800K	232	233	-	-	
5000K	234	235	-	-	
5200K	236	237	-	-	
5400K	238	239	-	-	
5600K	240	241	-	-	
6000K	242	243	-	-	
6500K	244	245	-	-	
7000K	246	247	-	-	
8000K	248	249	-	-	
9000K	250	251	-	-	
10000K	252	253	-	-	
FULL ON	254	255	-	-	

CTO On Colors

Function	8 bit value		16 bit value		Note
	From	To	From	To	
0 - 100%	0	255	-	-	Default @ 255

Strobe

Function	8 bit value		16 bit value		Note
	From	To	From	To	
Open	0	1	-	-	Default @ 255
Strobe from Slow to Fast	2	62	-	-	
Open	63	64	-	-	
Pulse In from slow to fast	65	125	-	-	
Close	126	127	-	-	
Pulse Out from slow to fast	128	188	-	-	
Open	189	190	-	-	
Random from slow to fast	191	251	-	-	
Open	252	255	-	-	

Control Channel

Function		8 bit value		Note
		From	To	
No Function / Safe		0	1	Default @ 0
DISPLAY	ON	2	3	Hold 3s to take function
	10s	4	5	
	20s	6	7	
	30s	8	9	
FLIP DISPLAY	ON	10	11	
	OFF	12	13	
KEY LOCK	ON	14	15	
	OFF	16	17	
DIMMER CURVE	LINEAR	18	19	
	S-CURVE	20	21	
	SQUARE LAW	22	23	
	INVERSE SQUARE LAW	24	25	
DIMMER SPEED	AUTO	26	27	
	FAST	28	29	
	MEDIUM	30	31	
	SLOW	32	33	
SPEKTRA CALIBRATION	ON	34	35	
	PURE COLORS	36	37	
	OFF	38	39	
LED MODE	HIGH QUALITY	40	41	
	HIGH BRIGHTNESS	42	43	

Control Channel

Function		8 bit value		Note
		From	To	
LED FREQUENCY	600HZ	44	45	
	1200HZ	46	47	
	2000HZ	48	49	
	4000HZ	50	51	
	6000HZ	52	53	
	25KHZ	54	55	
	36KHZ	56	57	
	40KHZ	58	59	
DMX FAULT	HOLD	60	61	
	BLACKOUT	62	63	
	STAND ALONE	64	65	
Reserved		66	67	
FAN MODE	AUTO	68	69	
	HIGH	70	71	
	SILENT	72	73	
	OFF	74	75	
TUNGSTEN EMULATION	ON	76	77	
	OFF	78	79	
OUTPUT CONTROL	CONSTANT	80	81	
	DYNAMIC	82	83	
STANDALONE	MASTER DMX	84	85	
	MASTER NO DMX	86	87	
	SLAVE	88	89	
	EFFECTS	90	91	
	FIXED COLORS	92	93	
	CCT	94	95	
	WHITE PRESETS	96	97	
	COLOR MACRO	98	99	
	MANUAL COLORS	100	101	
DIMMER SPEED	OFF	102	103	
Reserved		104	249	
Reset all channel controlled		250	251	
Reserved		252	255	

11 - RDM FUNCTIONS

The product can communicate using RDM (Remote Device Management) protocol over a DMX512 Networks.
RDM is a bi-directional communications protocol for use in DMX512 control systems, it is the open standard for DMX512 device configuration and status monitoring.
The RDM protocol allows data packets to be inserted into a DMX512 data stream without affecting existing non-RDM equipment. It allows a console or dedicated RDM controller to send commands to and receive messages from specific fixtures.
The PIDs in the following tables are supported in the product.

Category	Parameter	Value	GET	SET
RDM Information	SUPPORTED_PARAMETERS	0x0050	x	
	PARAMETER_DESCRIPTION	0x0051	x	
Product Information	PRODUCT_DETAIL_ID_LIST	0x0070	x	
	DEVICE_MODEL_DESCRIPTION	0x0080	x	
	MANUFACTURER_LABEL	0x0081	x	
	DEVICE_LABEL	0x0082	x	x
	FACTORY_DEFAULTS	0x0090	x	x
DMX512 Setup	DMX_PERSONALITY	0x00E0	x	x
	DMX_PERSONALITY_DESCRIPTION	0x00E1	x	
	DMX_START_ADDRESS	0x00F0	x	x
	SLOT_INFO	0x0120	x	
	SLOT_DESCRIPTION	0x0121	x	
	DEFAULT_SLOT_VALUE	0x0122	x	
Sensors	SENSOR_DEFINITION	0x0200	x	
	SENSOR_VALUE	0x0201	x	x
Dimmer Settings	DIMMER_INFO	0x0340	x	
	CURVE	0x0343	x	x
	CURVE_DESCRIPTION	0x0344	x	x
	OUTPUT_RESPONSE_TIME	0x0345	x	x
	OUTPUT_RESPONSE_TIME_ DESCRIPTION	0x0346	x	
	MODULATION_FREQUENCY	0x0347	x	x
	MODULATION_FREQUENCY_ DESCRIPTION	0x0348	x	
Power/Lamp Settings	DEVICE_HOURS	0x0400	x	x
	LAMP_HOURS	0x0401	x	
	LAMP_STRIKES	0x0402	x	
	LAMP_STATE	0x0403	x	
	LAMP_MODE	0x0404	x	
	DEVICE_POWER_CYCLES	0x0405	x	x
Display Settings	DISPLAY_INVERT	0x0500	x	x
Control	IDENTIFY_MODE	0x1040	x	x

Manufacturer Specific PIDs

Parameter	PID	GET	SET	Value	Description
MASTER/SLAVE	0x8211	x	x	0-2	0: Master DMX 1: Master NO DMX **2: Slave**
DMX FAULT	0x82DD	x	x	0-2	0: Hold 1: Blackout **2: Stand Alone**
MANUAL RED	0x82C0	x	x	0-255	**DEFAULT: 255**
MANUAL GREEN	0x82C1	x	x	0-255	**DEFAULT: 255**
MANUAL BLUE	0x82C2	x	x	0-255	**DEFAULT: 255**
MANUAL WHITE	0x82C3	x	x	0-255	**DEFAULT: 255**
CURRENT HOURS	0x82C5	x		0-1	
ERROR MESSAGES	0x82EA	x		0-2	
MAINTENANCE TIME:ALERT PERIOD	0x82DF	x	x	10-300	**DEFAULT: 300**
MAINTENANCE TIME:ELAPSED TIME	0x82E0	x	x	0-1	**DEFAULT: 0**
CLEAN ALL DATA	0x82C8	x	x	0-1	**0: No** 1: Yes
COLOR MACROS	0x82ED	x	x	0-66	See color macro table
FIXED COLOR	0x82BE	x	x	0-14	0: R 1: G 2: B 3: W 4: RG 5: RB 6: RW 7: GB 8: GW 9: BW 10:RGB 11:RGW 12:RBW 13:GBW **14:RGBW**
WHITE PRESETS	0x82BF	x	x	0-15	0: 2700K 1: 2800K **2: 3200K** 3: 3500K 4: 4000K 5: 4500K 6: 5000K 7: 5600K 8: 6000K 9: 6500K 10:7000K 11:8000K 12:9000K 13:10000K
EFFECTS	0x8209	x	x	1-5	**DEFAULT: 1**
LED MODE	0x8330	x	x	0-1	**0: High Quality** 1: High Brightness
OUTPUT	0x830C	x	x	0-1	**0: Constant Output** 1: Dynamic Output
POWER CONSUMPTION	0x82DE	x			
SPEKTRA CALIBRATION	0x822F	x	x	0-2	0: On **1: Pure Colors** 2: Off
STAND ALONE MODE	0x82EC	x	x	0-4	0:Effects **1:Fixed Color** 2:Color Macros 3:White Presets 4:Manual Colors
TUNGSTEN EMULATION	0x82BC	x	x	0-1	**0: Off** 1: On

12 - ACCESSORIES INSTALLATION

FILTER FRAME

(CODE ECLEXPOFL150FFBK - 150 OPTIONAL) - (CODE ECLEXPOFL300VWFFB - 300 OPTIONAL)

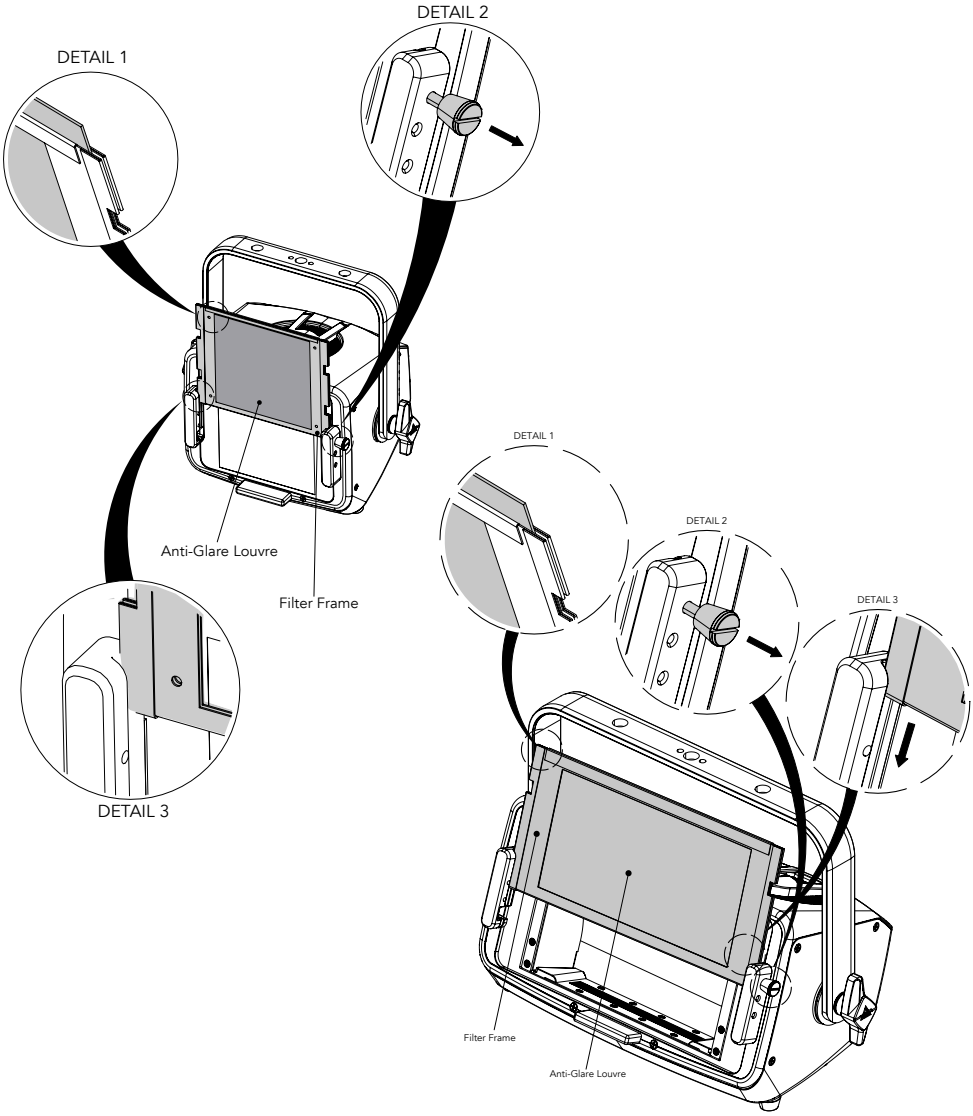

Insert the color filter into the slot (DETAIL 1). Pull the knob out (DETAIL 2) and insert the accessory filter frame from the top into the guide on the hardware of the unit (DETAIL 3). Then release the knob (DETAIL 3).
NOTE: To remove the accessory, reverse the procedure.

Fig. 11

BARN DOOR

(CODE ECLEXPOFL150BDBK - 150 OPTIONAL) - (CODE ECLEXPOFL300VWBDB - 300 OPTIONAL)

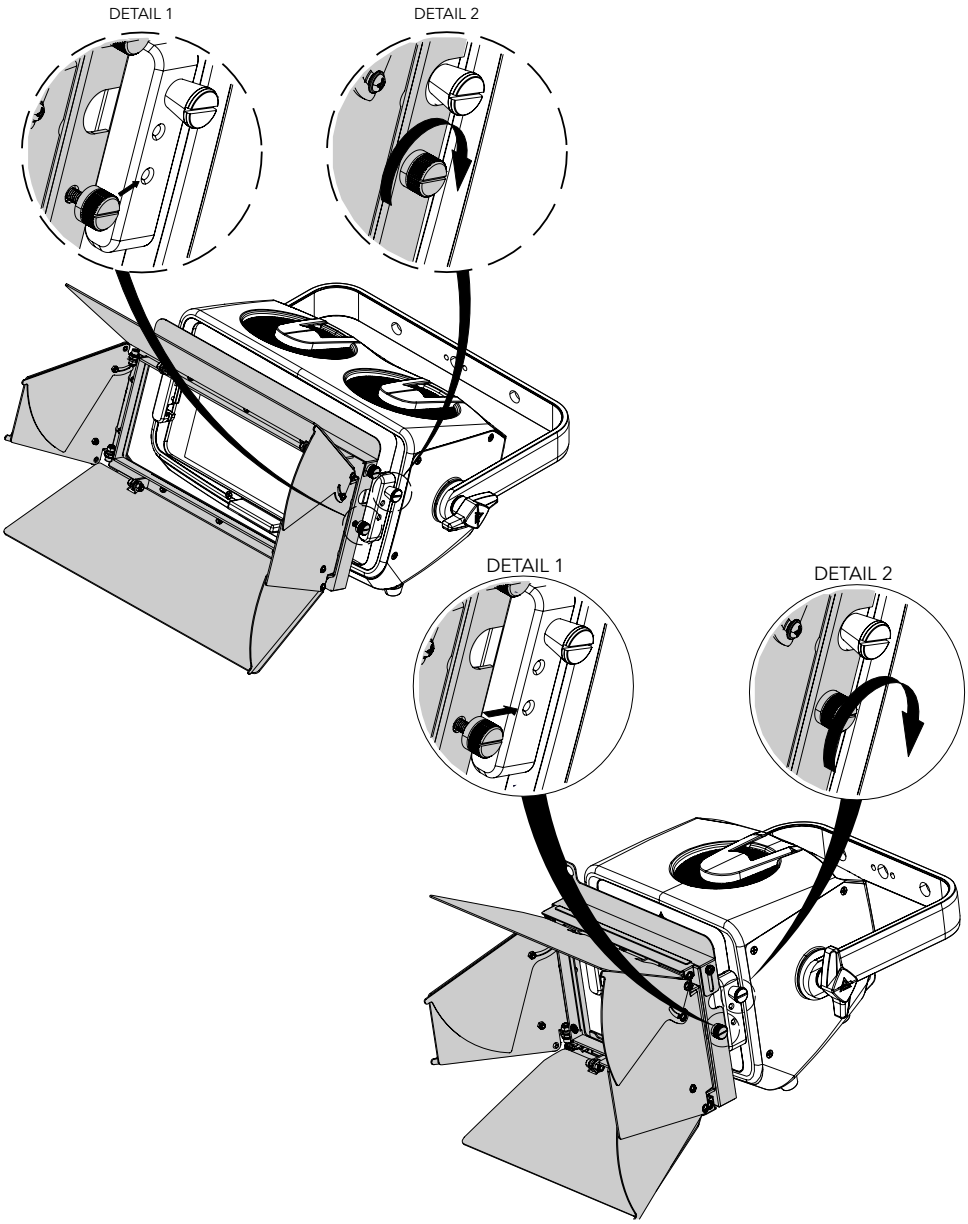

Unscrew the knob of the barndoor accessory (DETAIL 1). Then mount the barndoor by screwing the knob with the hole on the unit hardware (DETAIL 2).
NOTE: To remove the accessory, reverse the procedure.

Fig. 12

13 - MAINTENANCE

MAINTENANCE AND CLEANING THE PRODUCT

WARNING: Disconnect from the mains before starting any maintenance work
It is recommended to clean the front at regular intervals, from impurities caused by dust, smoke, or other particles to ensure that the light is radiated at maximum brightness.

- For cleaning, disconnect the main plug from the socket. Use a soft, clean cloth moistened with a mild detergent. Then carefully wipe the part dry. For cleaning other housing parts use only a soft, clean cloth. Never use a liquid, it might penetrate the unit and cause damage to it.
- The user must clean the product periodically to maintain optimum performance and cooling. The user may also upload firmware (product software) to the fixture via the DMX signal input port or USB port using firmware and instructions from PROLIGHTS.
- The frequency of such maintenance operations is to be performed according to various factors, such as the amount of the use and the condition of the installation environment (air humidity, presence of dust, salinity, etc.). It is recommended that the product is subject to annual service by a qualified technician for special maintenance involving at least the following procedures:
- General cleaning of internal parts.
- For all the parts subject to friction, using lubricants specifically supplied by PROLIGHTS.
- General visual check of the internal components, cabling, mechanical parts, etc.
- Electrical, photometric and functional checks; eventual repairs.
- Cleaning the lenses. Only use neutral soap and water to clean the lenses, then dry it carefully with a soft, non-abrasive cloth.

WARNING: the use of alcohol or any other detergent could damage the lenses.

- **Only for IP65/IP66 projectors**: It is recommended to verify IP grade using IPTESTBOX every time the bodies are removed for maintenance, this tool helps to double check the correct assembling of the covers with a check of the IP grade of the fixture.
- All other service operations on the product must be carried out by PROLIGHTS, its approved service agents or trained and qualified personnel.
- It is PROLIGHTS policy to apply the strictest possible calibration procedures and use the best quality materials available to ensure optimum performance and the longest possible component lifetimes. However, optical components are subject to wear and tear over the life of the product, resulting in gradual changes in colours over many thousands of hours of use. The extent of wear and tear depends heavily on operating conditions and environment, so it is impossible to specify precisely whether and to what extent performance will be affected. However, you may eventually need to replace optical components if their characteristics are affected by wear and tear after an extended period of use and if you require fixtures to perform within very precise optical and colour parameters.
- Do not apply filters, lenses or other materials on lenses or other optical components. Use only accessories approved by PROLIGHTS.

REPLACING THE FUSE (ONLY FOR IP20)

WARNING: Before replacing the fuse, unplug the product from the mains.

- Remove the old fuse from the housing with a suitable screwdriver (anticlockwise) and replace it with one of the same type and of the same classification:
  (ECLEXPOFL150FC: T3,15A 250V); (ECLEXPOFL300FC: T5A 250V)

VISUAL CHECK OF PRODUCT HOUSING

- The parts of the product cover/housing should be checked for eventual damages and breaking start at least every two months. In addition, especially the parts of the front lens holder have to be checked mechanically (by means of movement by the part) if it is firmly fastened to the fixture. If hint of a crack is found on some plastic part, do not use the product until the damaged part will be replaced.
- Cracks or another damages of the cover/housing parts can be caused by the product transportation or manipulation and also ageing process may influence materials.
- This checking is necessary for both fixed installations and preparing product for renting. Any free moving parts inside of the product, cracked cover/housing or any part of front lens not sitting properly in place need to be immediately replaced.

TROUBLESHOOTING

Problems	Possible causes	Checks and remedies
Product doesn't power ON	• No power to the product.	• Check that power is switched ON and cables are plugged in.
	• Fuse blown or internal fault.	• Check if the Fuse is intact and eventually replace it if necessary. • Contact the PROLIGHTS Service or authorized service partner. Do not remove parts and/or covers, or carry out any repairs or service that are not described in this Safety and User Manual unless you have both authorization from PROLIGHTS and the service documentation.
Product reset correctly but does not respond correctly to the contoller.	• Bad signal connection.	• Inspect connections and cables. Fix eventual bad connections. Repair or replace damaged cables.
	• Signal connection not terminated.	• Insert DMX termination plug in signal output socket of the last product on the signal line.
	• Incorrect addressing of the product.	• Check the product address and control settings.
	• One of the product is defective and is corrupting the signal transmission on the signal line.	• Unplug the XLR in and out connectors and connect them directly together to bypass one product at a time until normal operation is regained. Once found the error, have that fixture serviced by a qualified technician.
Timeout error after fixture reset.	• One or more hardware components requires mechanical adjustments.	• Check product stored error messages for more information. Contact PROLIGHTS Service or an authorized service partner.
Mechanical effect loses position	• Mechanical hardware require cleaning, adjustment or lubrification.	• Check product stored error messages for more information. Contact PROLIGHTS Service or an authorized service partner.
Light output turn OFF Intermittently	• Fixture is too hot.	• Check product stored error messages. • Allow product to cool. • Clean the product and airflow filters. • Reduce ambient temperature.
	• Hardware failure (temperature sensor, fans, Light source...).	• Check product stored error messages for more information. Contact PROLIGHTS Service or an authorized service partner.
General low light intensity	• Dirty lens assembly • Dirty or damaged filters	• Clean the fixture regularly. • Install lens assembly properly.

Contact an authorized service center in case of technical problems or not reported in the table can not be resolved by the procedure given in the table.

14 - TEST OF IP65 RATING

It is recommended to verify IP grade using IPTESTBOX every time the bodies are removed for maintenance.

1

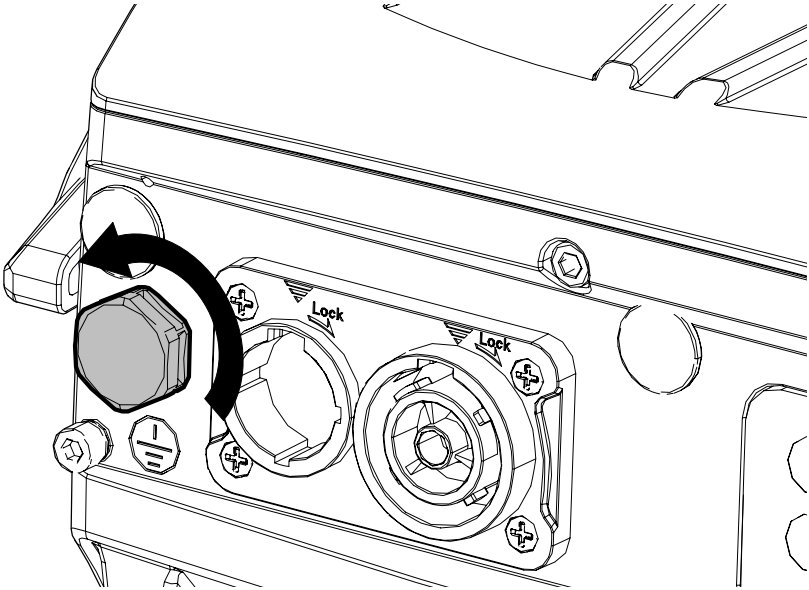

Remove the gore valve from the side of the projector.

2

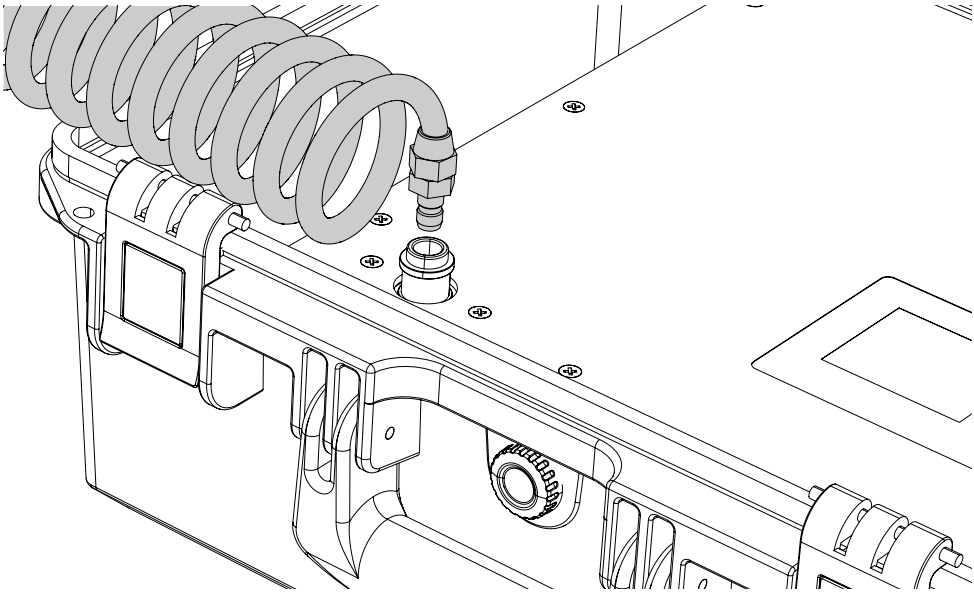

Connect the air hose to the IPTESTBOX by inserting the quick-connect fitting into the coupler.

3

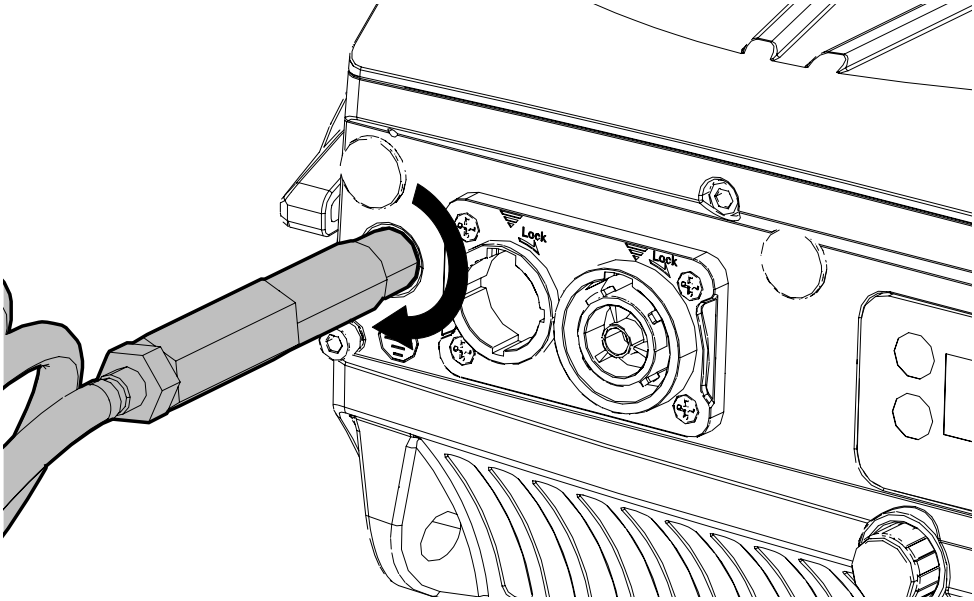

Insert the threaded end into the threaded valve hole socket.

For the operating procedure using the instrument, refer to the IPTESTBOX user manual.

Fig. 13

Note

PROLIGHTS is a trademark of
MUSIC & LIGHTS S.r.l.
musiclights.it

Via A.Olivetti snc
04026 - Minturno (LT) ITALY
Tel: +39 0771 72190

prolights.it
support@prolights.it